Design Manual for Roads and Bridges

Road Layout
Design

CD 109
Highway link design

(formerly TD 9/93, TD 70/08)

Revision 1

Summary
This document provides requirements and advice for all aspects of highway link design to be used for both new and improved all-purpose and motorway trunk roads including connector roads.

Application by Overseeing Organisations
Any specific requirements for Overseeing Organisations alternative or supplementary to those given in this document are given in National Application Annexes to this document.

Feedback and Enquiries
Users of this document are encouraged to raise any enquiries and/or provide feedback on the content and usage of this document to the dedicated Highways England team. The email address for all enquiries and feedback is: Standards_Enquiries@highwaysengland.co.uk

This is a controlled document.

Downloaded from https://www.standardsforhighways.co.uk on 07-Aug-2023, CD 109 , published: Mar-2020

Contents

Release notes 3

Foreword 4
Publishing information 4
Contractual and legal considerations 4

Introduction 5
Background 5
Assumptions made in the preparation of this document 5
Design principles 5
General 5
Connection to existing roads 5
Wide single 2 + 1 roads and climbing lanes 5
Coordinated link design 5

Abbreviations and symbols 6

Terms and definitions 7

1. Scope 8
Aspects covered 8
Implementation 8
Use of GG 101 8

2. Design speed 9
Selection of design speed 9
Rural roads 9
Urban roads 12
Harmonic mean visibility (VISI) 12
Design speed related parameters and relaxations 13

3. Sight distance 18
Stopping sight distance 18
Full overtaking sight distance 18
Obstructions to sight distance 18
Relaxations 19

4. Horizontal alignment 20
Road camber and superelevation 20
Relaxations 20
Application of superelevation 21
Widening on curves 21
Transitions 22
Length of curve: 22

5. Vertical alignment 23
Gradients 23
Minimum gradient 23
Vertical curves 23
General 23
Crest curves 23
Sag curves 24
Relaxations 24
Crest curves 24
Sag curves 24

Downloaded from https://www.standardsforhighways.co.uk on 07-Aug-2023, CD 109 , published: Mar-2020

6. Wide single 2+1 roads **26**
Design principles . . . 26
Geometric standards . . . 27
Cross-section . . . 27
Lengths of overtaking lane sections . . . 29
Changeovers . . . 29
WS2+1 interfaces . . . 30
Traffic signs and road markings . . . 31

7. Climbing lanes - single carriageways **38**
Introduction . . . 38
Layout . . . 38
Layout at the start of a climbing lane . . . 38
Layout at the end of climbing lane . . . 40
Sight distance requirements . . . 45
Road markings . . . 45

8. Climbing lanes - dual carriageways and motorways **50**
Introduction . . . 50
Layout . . . 50
Lane widths . . . 50
Layout at the start of climbing lane . . . 50
Layout at the end of climbing lane . . . 51

9. Single carriageway road overtaking sections **56**
Overtaking sections . . . 56
Overtaking value . . . 56
Lengths of road over 2km . . . 56
Lengths of road less than 2 km . . . 56
Level overtaking sections . . . 56
Commencement of level overtaking sections . . . 57
Termination of level overtaking sections . . . 57
Climbing lane sections . . . 58
Commencement of climbing lane overtaking sections . . . 58
Termination of climbing lane overtaking sections . . . 58
Single lane downhill sections at climbing lanes . . . 58
Commencement of single lane downhill overtaking sections at climbing lanes . . . 58
Termination of single lane downhill overtaking sections at climbing lanes . . . 61
Dual carriageway overtaking sections . . . 61
Commencement of dual carriageway overtaking sections . . . 61
Termination of dual carriageway overtaking sections . . . 61
Wide single 2+1 roads (WS2+1) . . . 61
Commencement of WS2+1 overtaking sections . . . 61
Termination of WS2+1 overtaking sections . . . 61
Obstructions to overtaking . . . 61
Horizontal curve design . . . 62
Vertical curve design . . . 64
Changes in carriageway type . . . 65

10. Normative references **66**

11. Informative references **67**

Appendix A. Coordinated link design **68**

Downloaded from https://www.standardsforhighways.co.uk on 07-Aug-2023, CD 109 , published: Mar-2020

Release notes

Version	Date	Details of amendments
1	Mar 2020	Revision 1 (March 2020) Update to references in England National Application Annex only. Revision 0 (November 2019) CD 109 replaces TD 9/93 and TD 70/08. This full document has been re-written to make it compliant with the new Highways England drafting rules.

Downloaded from https://www.standardsforhighways.co.uk on 07-Aug-2023, CD 109 , published: Mar-2020

Foreword

Publishing information

This document is published by Highways England.

This document supersedes TD 9/93 "Highway Link Design" and TD 70/08 "Design of Wide Single 2+1 Roads", which are withdrawn.

Contractual and legal considerations

This document forms part of the works specification. It does not purport to include all the necessary provisions of a contract. Users are responsible for applying all appropriate documents applicable to their contract.

Downloaded from https://www.standardsforhighways.co.uk on 07-Aug-2023, CD 109 , published: Mar-2020

Introduction

Background

This document sets out the design requirements and advice to be used when developing the design of a highway / road link.

Assumptions made in the preparation of this document

The assumptions made in GG 101 [Ref 5.N] apply to this document.

Design principles

General

This document provides requirements and advice to derive the design speed and the appropriate values of geometric parameters for use in the design of the road alignment. It states the basic principles to be used for coordinating the various geometrical elements of the road design, which together form the three dimensional design of the road.

This document provides requirements for maximum and minimum levels of provision for the various design features and also identifies where relaxations from these requirements are permitted.

Connection to existing roads

Where an improved section of road rejoins an unimproved section of existing road, providing a similar standard of curvature and stopping sight distance as provided for the improvement will create a consistent standard at the interface.

The figure below shows the connection of an improvement to an existing road. The curvature and stopping sight distance at point C is adequate for the approach design speed which has increased due to the improvement between points A and B.

Connection to existing roads

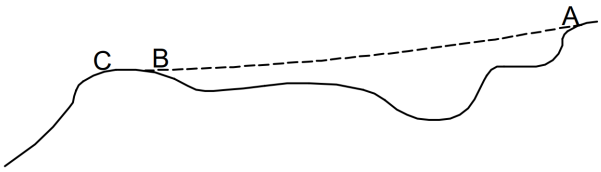

Wide single 2 + 1 roads and climbing lanes

This document includes requirements and advice for the design of wide single 2 + 1 roads and climbing lanes when improving an existing carriageway or in a new build situation.

Coordinated link design

The various geometrical elements detailed in this document need to be coordinated, together with cross-section (CD 127 [Ref 1.N]) and junction layouts (CD 122 [Ref 3.N], CD 123 [Ref 2.N] and roundabouts CD 116 [Ref 4.N]), so the three-dimensional layout as a whole is appropriate in terms of traffic safety, operation and economic / environmental effects. Single carriageway design is given particular emphasis due to the problems of driver understanding and provision for overtaking. A general guide of the layout features, such as edge treatments, access treatments and junction types, that can be appropriate for various types of rural roads is given in Appendix A. It is not possible to tabulate overall layout characteristics for roads in urban areas in the same way as for rural areas, as the constraints of the existing urban fabric will result in designs tailored to meet the site-specific requirements.

Downloaded from https://www.standardsforhighways.co.uk on 07-Aug-2023, CD 109 , published: Mar-2020

Abbreviations and symbols

Abbreviations

Abbreviation	Definition
AADT	Annual average daily traffic
C/way	Carriageway
D2AP	Dual 2 lane all-purpose
D3AP	Dual 3 lane all-purpose
D2M	Dual 2 lane motorway
D3M	Dual 3 lane motorway
D4M	Dual 4 lane motorway
FOSD	Full overtaking sight distance
Km	Kilometres
Kph	Kilometres per hour
S2	Single 2 lane carriageway
TSRGD	Traffic Signs Regulations and General Directions
VRS	Vehicle Restraint System
WS2	Wide Single 2 lane carriageway
WS2+1	Wide Single 2+1 carriageway

Symbols

Symbol	Definition
Ac	Alignment constraint
B	Bendiness Degrees / km
L	Length of basic transition (metres)
Lc	Layout constraint
n	Number of observations
q	Rate of change of centripetal acceleration (metres / second^3) travelling along curve at constant speed V(kph)
R	Radius of curve (metres)
S	Superelevation %
V	Design speed kph
VW	Average verge width (averaged for both sides of the road)
VISI	Harmonic mean visibility

Downloaded from https://www.standardsforhighways.co.uk on 07-Aug-2023, CD 109 , published: Mar-2020

Terms and definitions

Terms and definitions

Term	Definition
Adverse camber	A road profile where the carriageway surface slopes away from the inside of a bend, resulting in the carriageway being higher on the inside of the bend than on the outside.
Alignment constraint	The degree of constraint imparted by the road alignment.
Bendiness	The total change of direction in horizontal alignment in degrees / km measured over a minimum length of 2km.
Changeover	A carriageway layout which effects a change in the designated use of the middle lane of a WS2+1 road from one direction of traffic to the opposite direction.
Climbing lane	The nearside lane when a lane is added to a single carriageway, dual carriageway or motorway in order to improve capacity and / or safety because of the presence of a steep gradient.
Conflicting changeover	A changeover where the vehicles using the middle lane on a WS2+1 road are travelling towards each other.
Full overtaking sight distance	The sight distance required for overtaking vehicles using the opposing traffic lane on single carriageway roads.
Harmonic mean visibility	The harmonic mean of individual measurements of sight distance.
Layout constraint	The degree of constraint imparted by the road cross-section, verge width and frequency of junctions and accesses.
Link	A length of road between junctions.
Non-conflicting changeover	A changeover where the vehicles using the middle lane on a WS 2+1 road are travelling away from each other.
Non-overtaking section	Sections of a 2 lane single carriageway road which are not overtaking sections.
Overtaking lane section	A two lane section of a WS2+1 road provided in one direction to facilitate overtaking, with the opposing traffic confined to one lane.
Overtaking section	Sections of 2 lane single carriageway road where the combination of horizontal / vertical alignment, visibility, or width provision is such that clear opportunities for overtaking using the opposing lane occur.
Single lane section	A single lane section of a WS2+1 road provided in one direction running parallel to an overtaking lane section in the opposite direction.
Stopping sight distance	The distance within which drivers need to be able to see ahead to stop from a given speed as required by this document.
WS2 carriageway	A wide single carriageway road with one lane in each direction.
WS2+1 carriageway	A road with two lanes of travel in one direction and a single lane in the opposite direction as outlined in Section 6 of this document.
WS2+1 interface	The interface between a WS2+1 road and a two-lane single carriageway road (S2).

Downloaded from https://www.standardsforhighways.co.uk on 07-Aug-2023, CD 109 , published: Mar-2020

1. Scope

Aspects covered

1.1 This document provides requirements and advice for all aspects of highway / road link design and shall be used for both new and improved motorway and all-purpose trunk roads.

1.2 This document shall apply to WS2 roads where they are equal to or less than 2km in length.

Implementation

1.3 This document shall be implemented forthwith on all schemes involving highway / road link design on the Overseeing Organisations' motorway and all-purpose trunk roads according to the implementation requirements of GG 101 [Ref 5.N].

Use of GG 101

1.4 The requirements contained in GG 101 [Ref 5.N] shall be followed in respect of activities covered by this document.

Downloaded from https://www.standardsforhighways.co.uk on 07-Aug-2023, CD 109 , published: Mar-2020

2. Design speed

Selection of design speed

Rural roads

2.1 For new rural roads, design speed shall be derived from Figure 2.1 using alignment constraint (Ac) and layout constraint (Lc).

Figure 2.1 Selection of design speed (rural roads)

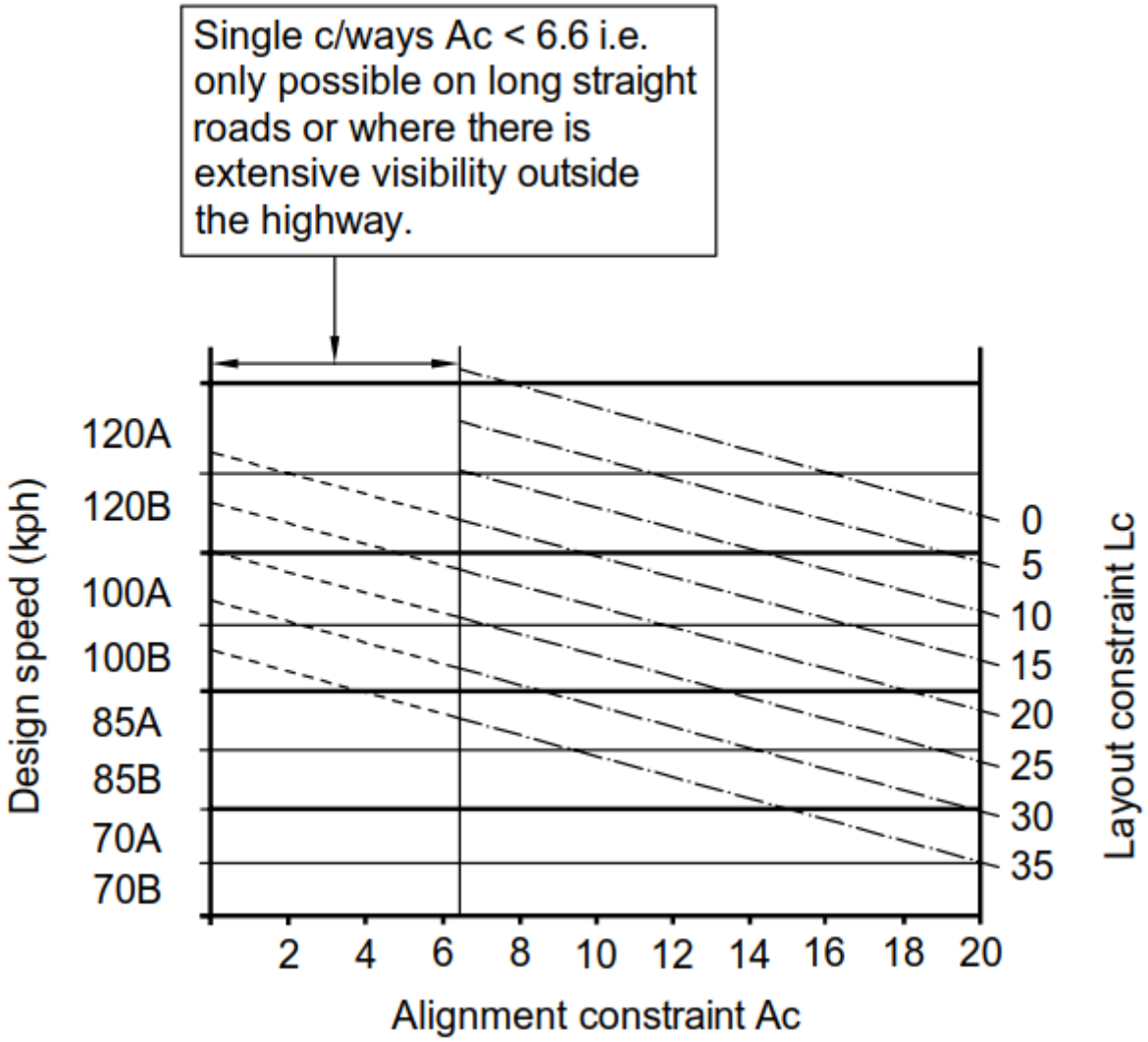

NOTE 1 In Figure 2.1 the design speeds are arranged in bands (i.e. 120kph, 100kph, 85kph, etc). Suffixes A and B indicate the higher and lower categories of each band.

NOTE 2 As an example using Figure 2.1 to derive a design speed, an Ac value of 12 and and Lc value of 15 would give a design speed of 100A.

2.2 Alignment constraint (Ac) shall be calculated using Equation 2.2a and Equation 2.2b for dual carriageways and single carriageways respectively:

Downloaded from https://www.standardsforhighways.co.uk on 07-Aug-2023, CD 109 , published: Mar-2020

Equation 2.2a Dual carriageways

$$Ac = 6.6 + \frac{B}{10}$$

Equation 2.2b Single carriageways

$$Ac = 12 - \frac{\text{VISI}}{60} + \frac{\text{2B}}{45}$$

where:

B = Bendiness degrees / km.

VISI = Harmonic mean visibility (metres) (see harmonic mean visibility section below).

NOTE *Bendiness is calculated by dividing the sum of the change in direction (in degrees) of a road by the length (in km) over which it occurs. For example, a 3km length of road with a total change in direction of 180 degrees would have a bendiness of 60 degrees / km.*

2.3 Layout constraint (Lc) shall be derived using Table 2.3.

Downloaded from https://www.standardsforhighways.co.uk on 07-Aug-2023, CD 109 , published: Mar-2020

Downloaded from https://www.standardsforhighways.co.uk on 07-Aug-2023, CD 109 , published: Mar-2020

Table 2.3 Layout constraint (Lc)

Road type	S2				WS2		WS2+1		D2AP		D3AP	D2M	D3M	D4M
Carriageway width (excluding hard strips and hard shoulder)	6 metres		7.3 metres		10 metres		11.5 metres		Dual 7.3 metres		Dual 11 m-etres	Dual 7.3 metres & hard shoulder	Dual 11 metres & hard shoulder	Dual 14.7 metres & hard shoulder
Frequency of commercial accesses, lay-bys and junctions	H	M	M	L	M	L	M	L	M	L	L	L	L	L
Standard verge width	29	26	23	21	19	17	19	17	10	9	6	4	0	0
1.5 metre verge	31	28	25	23	-	-	-	-	-	-	-	-	-	-
0.5 metre verge	33	30	-	-	-	-	-	-	-	-	-	-	-	-
L = Low number of commercial accesses, lay-bys and junctions, less than or equal to 5 per km														
M = Medium number of commercial accesses, lay-bys and junctions, between 6 to 8 per km														
H = High number of commercial accesses, lay-bys and junctions, greater than or equal to 9 per km														

NOTE 1 *Layout constraint (Lc) measures the degree of constraint provided by the road cross-section, verge width, and frequency of junctions, lay-bys and commercial accesses.*

NOTE 2 *Values of Lc are obtained from Table 2.3 by reading along the appropriate verge width rows and down the road type columns corresponding to the appropriate frequency of commercial accesses, lay-bys and junctions. The appropriate value of Lc is denoted by the number read at the intersection of the verge width row and the road type column.*

2.4 For road improvements of up to 2km in length on existing rural roads, the design speed shall be derived using Figure 2.1 with the value of Ac calculated for a minimum road length of 2 km incorporating the section of road improvement.

Urban roads

2.5 On urban roads, design speeds shall be selected with reference to the speed limits for the road, as shown in Table 2.5.

Table 2.5 Urban roads speed limit/design speed relationship

Speed limit		Design speed
Mph	**Kph**	**Kph**
30	48	60B
40	64	70A
50	80	85A
60	96	100A

NOTE *Design speeds are higher than the speed limit and therefore permit a small margin for vehicle speeds in excess of the speed limit.*

Harmonic mean visibility (VISI)

2.6 The harmonic mean visibility (VISI) shall be measured over a minimum length of 2km.

2.6.1 Measurements of sight distance should be taken in both directions at regular intervals (50 metres for sites of restricted visibility, 100 metres for sites with unrestricted visibility).

2.7 Sight distance shall be measured from an eye height of 1.05 metres to an object height of 1.05 metres, with both measurements taken above the centre line of the road surface.

2.8 Sight distance shall be the true sight distance available at any location, including any sight distance available across verges and outside of the highway boundary or across embankment slopes or adjoining land, as shown in Figure 2.8.

Figure 2.8 Measurement of harmonic mean visibility

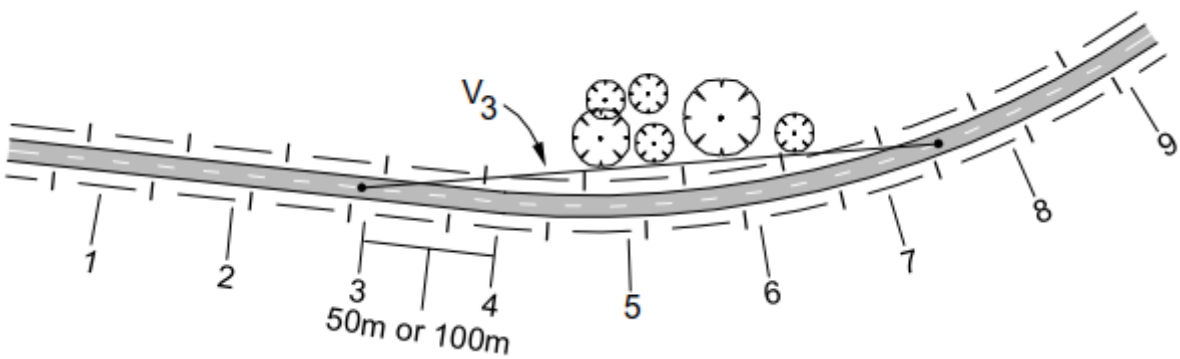

2.8.1 The harmonic mean visibility for new roads should be calculated using Equation 2.8.1.

Downloaded from https://www.standardsforhighways.co.uk on 07-Aug-2023, CD 109 , published: Mar-2020

Equation 2.8.1 Formula for calculating harmonic mean visibility

$$VISI = \frac{n}{\frac{1}{V_1} + \frac{1}{V_2} + \frac{1}{V_3} \ldots + \frac{1}{V_n}}$$

where:

n = Number of observations.

V_1 = Sight distance at point 1, etc.

2.8.2 The harmonic mean visibility for existing roads should be calculated using an empirical relationship given in Equation 2.8.2.

Equation 2.8.2 Empirical relationship

$$\mathrm{Log}_{10} VISI = 2.46 + \frac{\mathrm{VW}}{25} - \frac{B}{400}$$

where:

VW = Average verge width (averaged for both sides of the road)

B= Bendiness (degree per km - minimum length of 2 km)

NOTE 1 Equation 2.8.2 is applicable up to VISI = 720 metres.

NOTE 2 On long straight roads, or where sight distance is available outside of the highway boundary, the relationship between the average verge width and bendiness can result in values of harmonic visibility calculated using Equation 2.8.1 being significantly underestimated.

2.8.3 For preliminary route analysis, where detailed measurements of sight distance are not available, the following typical values should be used:

1) VISI = 700 metres for long virtually straight roads, or where the road is predominantly on embankment affording high visibility across embankment slopes or adjoining level land;
2) VISI = 500 metres where a new road is designed with continuous overtaking visibility, with large crest K values and wide verges for visibility;
3) VISI = 300 metres where a new road is designed with frequent overtaking sections, but with stopping sight distance provision at all sharp curves;
4) VISI = 100 - 200 metres where an existing single carriageway contains sharp bends, frequent double white line sections and narrow verges.

NOTE The empirical relationship provided by Equation 2.8.2 can be used for the preliminary analysis of existing routes if values of bendiness (B) are available.

Design speed related parameters and relaxations

2.9 Designs shall provide at least the desirable minimum values for stopping sight distance, horizontal curvature, vertical crest curvature and sag curvature as shown in Table 2.10, except for the following situations:

1) where a relaxation is permitted by sections 2, 3, 4 or 5 of this document;
2) the design of a vertical crest curve on a 2 lane single carriageway road (see Section 9).

2.9.1 Design parameters should meet or exceed desirable minimum values except where particular circumstances relating to 2 lane single carriageways roads exist (see Section 9).

NOTE Requirements and advice on the application of relaxations below desirable minimum is provided in GG 101 [Ref 5.N].

Downloaded from https://www.standardsforhighways.co.uk on 07-Aug-2023, CD 109 , published: Mar-2020

2.9.2 Interfaces between sections of road with different design speeds should be designed so as not to suddenly present the driver with low radius horizontal curves, sharp crests or shorter sight distances.

2.10 Minimum geometric parameters for full overtaking sight distance (FOSD) and overtaking crest K values that shall be used for the corresponding design speed are shown in Table 2.10.

Downloaded from https://www.standardsforhighways.co.uk on 07-Aug-2023, CD 109 , published: Mar-2020

Downloaded from https://www.standardsforhighways.co.uk on 07-Aug-2023, CD 109 , published: Mar-2020

Table 2.10 Design speed related parameters

Design speed kph	120	100	85	70	60	50	V2/R
Stopping sight distance (metres)							
Desirable minimum	295	215	160	120	90	70	-
One step below desirable minimum	215	160	120	90	70	50	-
Horizontal curvature (metres)							
Minimum R* with adverse camber and without transitions	2880	2040	1440	1020	720	520	5
Minimum R* with superelevation of 2.5%	2040	1440	1020	720	510	360	7.07
Minimum R* with superelevation of 3.5%	1440	1020	720	510	360	255	10
Desirable minimum R (superelevation 5%)	1020	720	510	360	255	180	14.14
One step below desirable Minimum R (superelevation 7%)	720	510	360	255	180	127	20
Two steps below desirable minimum radius (superelevation 7%)	510	360	255	180	127	90	28.28
Vertical curvature							
Desirable minimum* crest K value	182	100	55	30	17	10	-
One step below desirable min crest K value	100	55	30	17	10	6.5	-
Desirable minimum sag K value	37	26	20	20	13	9	-
Overtaking sight distances							
Full overtaking sight distance FOSD (metres)	-	580	490	410	345	290	-
FOSD overtaking crest K value	-	400	285	200	142	100	-
* Not recommended for use in the design of single carriageways (see Section 9)							
The V^2/R values shown above simply represent a convenient means of identifying the relative levels of design parameters, irrespective of design speed.							

NOTE 1 *The limit for relaxations is defined by a given number of design speed steps below a specific bench mark, usually the desirable minimum. Relaxations vary according to the type of road - motorway or all-purpose, and whether the design speed is band A or band B. Details for permitted relaxations are given in:*

1) *Section 3 for stopping sight distance;*
2) *Section 4 for horizontal alignment; and*
3) *section 5 for vertical alignment.*

NOTE 2 *GG 101 [Ref 5.N] provides requirements and advice on recording the decision process when applying relaxations.*

NOTE 3 *When preparing design options that include relaxations, a number of site specific factors need to be assessed, including, whether the site is:*

1) *isolated from other relaxations;*
2) *isolated from junctions;*
3) *one where drivers have desirable minimum stopping sight distance;*
4) *subject to momentary visibility impairment only;*
5) *subject to low traffic volumes;*
6) *on geometry that is readily understandable to road users;*
7) *on a road with no frontage access;*
8) *one where traffic speeds are reduced locally due to adjacent road geometry (e.g. uphill sections, approaching roundabouts and priority junctions where traffic has to give way or stop, etc), or speed limits.*

NOTE 4 *The safety risk of using a relaxation in the design can be mitigated by providing:*

1) *collision prevention measures;*
2) *specific warning signs and road markings.*

2.11 Values for stopping sight distance, horizontal curvature and vertical curvature shall not be less than those given in Table 2.10 for 50kph design speed regardless of permitted relaxations.

2.12 Except for stopping sight distance relaxations of up to 1 design speed step below desirable minimum coincident with horizontal curvature relaxations of up to 1 design speed step below desirable minimum, relaxations shall not be used in combination.

2.13 The relaxations below desirable minimum in stopping sight distance, desirable minimum vertical curvature for crest curves and sag curves, described in Sections 3 and 5 of this document respectively, shall not be used on the immediate approaches to junctions.

NOTE *For the purposes of this document the immediate approaches to a junction are defined as:*

1) *for minor road approaches at at-grade priority junctions without diverge and merge tapers, those lengths of carriageway on the minor roads between a point 1.5 times the desirable minimum stopping sight distance upstream of the stop line or give way line and the stop line or give way line itself;*
2) *for major road approaches at at-grade priority junctions without diverge and merge tapers, those lengths of carriageway on the mainline between a point 1.5 times the desirable minimum stopping sight distance from the centre line of the minor road and the centre line itself;*
3) *for at-grade junctions with a diverge taper the length of carriageway from a point 1.5 times the desirable minimum stopping sight distance upstream of the start of the diverge taper to a point level with the minor road centre line;*
4) *for at-grade junctions with a diverge auxiliary lane the length of carriageway from a point 1.5 times the desirable minimum stopping sight distance upstream of the start of the auxiliary lane taper to a point level with the minor road centre line;*

Downloaded from https://www.standardsforhighways.co.uk on 07-Aug-2023, CD 109 , published: Mar-2020

5) *for at-grade junctions with a merge taper the length of carriageway from a point 1.5 times the desirable minimum stopping sight distance upstream of a point level with the minor road centre line to the end of the merge taper;*

6) *for roundabouts, those lengths of carriageway on the approach to the roundabout between a point 1.5 times the desirable minimum stopping sight distance from the give way line and the give way line itself;*

7) *for grade separated diverges with a diverge taper, the length of carriageway from a point 1.5 times the desirable minimum stopping sight distance upstream of the start of the diverge taper to the back of the diverge nose. For diverges without a diverge taper, the length of carriageway 1.5 times the desirable minimum stopping sight distance upstream of a point equivalent to the diverge exit taper length for the appropriate road class (see CD 122 [Ref 3.N]) upstream from the tip of nosing or ghost island head to the back of nosing;*

8) *for grade separated merges with a merge taper, the length of carriageway from a point 1.5 times the desirable minimum stopping sight distance upstream of the back of the merge nose to the end of the merge taper. For merges without a merge taper, the length of carriageway from a point 1.5 times the desirable minimum stopping sight distance upstream of the back of the merge nose to a point equivalent to merge entry taper length downstream of the tip of nosing or ghost island tail (see CD 122 [Ref 3.N]).*

2.13.1 Where the design speed of an alignment changes from a higher to a lower value, permitted relaxations in design standards should be avoided on the length of road with the lower design speed adjacent to its interface with the section of road with the higher design speed.

Downloaded from https://www.standardsforhighways.co.uk on 07-Aug-2023, CD 109 , published: Mar-2020

3. Sight distance

Stopping sight distance

3.1 Stopping sight distance as identified in Table 2.10 shall be measured between driver's eye heights of 1.05 metres and 2.00 metres to object heights of between 0.26 metres and 2.00 metres measured from the road surface, as shown in Figure 3.1.

Figure 3.1 Measurement of stopping sight distance

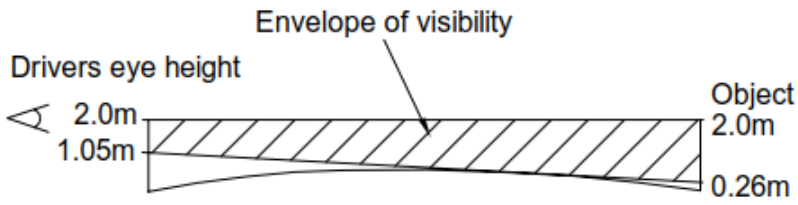

3.2 Desirable minimum stopping sight distance shall be available between any two points in the centre of each lane within the horizontal and vertical extents of the visibility envelope (measured for each carriageway in the case of dual carriageways and motorways).

Full overtaking sight distance

3.3 Where an overtaking section is provided, at least full overtaking sight distance shall be available between eye heights of 1.05 metres and 2.00 metres to object heights of 1.05 metres and 2.00 metres above the centre of the carriageway as shown in Figure 3.3.

Figure 3.3 Measurement of full overtaking sight distance

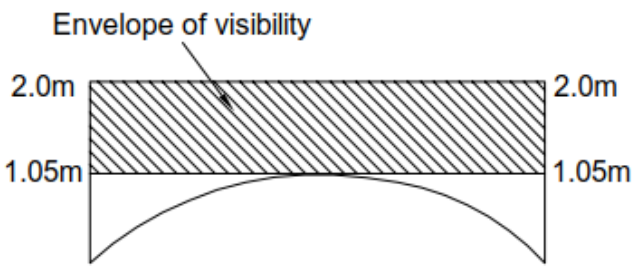

3.3.1 On 2 lane single carriageway roads, overtaking sections should be provided on as much of the road as practicable, especially where daily traffic flows are expected to approach the maximum design flows.

NOTE 1 Where an overtaking section is provided on a 2 lane single carriageway road, the full overtaking sight distance to be used is shown in Table 2.10 for the corresponding design speed.

NOTE 2 Full overtaking sight distance can normally only be economically provided in flat terrain where the combination of vertical and horizontal alignment permits the design of a level and relatively straight road alignment. It can be more economical to design a single carriageway road to provide clearly identifiable overtaking sections with full overtaking sight distance in relatively level areas, with individual sections of overtaking lane interspersed with non-overtaking sections.

NOTE 3 Designs which provide the driver with overtaking sections have been found to have a lower frequency of serious collisions than roads with continuous large radius curves without overtaking sections.

Downloaded from https://www.standardsforhighways.co.uk on 07-Aug-2023, CD 109 , published: Mar-2020

Obstructions to sight distance

3.4 The stopping sight visibility envelope shall be free of obstructions by fixed objects with the exception of:

1) a fixed object with a width / length less than or equal to 550mm;
2) a group of fixed objects with a combined width / length of 550mm or less
3) those obstructions covered by the relaxations below.

NOTE 1 Isolated slim objects less than or equal to 550mm in width / length, such as lighting columns, sign supports, or slim footbridge supports, only result in intermittent obstructions to sight lines.

NOTE 2 On horizontal curves where the road is in a cutting, or at bridge crossings, verges and central reserves can be widened or bridge clearances increased to ensure the appropriate stopping sight distance is not obstructed.

NOTE 3 Verge and central reserve widening is sometimes required on horizontal curves to provide stopping sight distance in front of VRS.

3.4.1 Stopping sight distance and FOSD may be measured across opposing lanes or carriageways.

Relaxations

3.5 Except for the restrictions to relaxations noted in Section 2 (Relaxations) of this document and in the clauses below, relaxations to the desirable minimum stopping sight distance requirements shall be permitted as identified in Table 3.5.

Table 3.5 Number of steps permitted below desirable minimum - stopping sight distance

Road type	Design speed band	Permitted relaxation
Motorways	Band A	1 step
Motorways	Band B	2 steps
All-purpose	Band A	2 steps
All-purpose	Band B	3 steps

3.6 Further relaxations to those shown in Table 3.5 shall be permitted as follows:

1) for all band A roads where the stopping sight distance is reduced by features such as bridge piers, bridge abutments, communications equipment, lighting columns, supports for gantries and traffic signs in the verge or central reserve which form momentary obstructions greater than 550mm in width / length, the scope for relaxations can be extended by 1 design speed step;
2) long bridge parapets or safety fences or safety barriers on horizontal curves can obscure stopping sight distance to the 0.26 metre object height, although the appropriate sight distance to the tops of other vehicles, represented by the 1.05 metre object height, can be obtained above the parapet or safety fence or safety barrier. For band A roads where the appropriate stopping sight distance to the high object is available in this way, the scope for relaxation of stopping sight distance for sight lines passing in front of the obstruction to the 0.26 metre object height can be extended by 1 design speed step;
3) at or near the top of up gradients on single carriageways steeper than 4% and longer than 1.5 km, the scope for relaxation can be extended by 1 step due to reduced speeds uphill.

3.7 The permitted relaxations identified in Table 3.5 shall be reduced by 1 design speed step:

1) on and immediately following long grades on dual carriageways steeper than 3% and longer than 1.5km;
2) immediately following an overtaking section on single carriageway roads.

Downloaded from https://www.standardsforhighways.co.uk on 07-Aug-2023, CD 109 , published: Mar-2020

4. Horizontal alignment

Road camber and superelevation

4.1 On horizontal curves, with radii less than shown in Table 2.10 (Minimum R with adverse camber and without transitions), (i.e. $V^2/R > 5$) but greater or equal to radii shown in Table 2.10 (Minimum R* with superelevation of 2.5%), 2.5% superelevation falling towards the inside of the curve shall be provided.

4.1.1 On sections of road with radii greater than shown in Table 2.10 (Minimum R with adverse camber and without transitions), (i.e. $V^2/R < 5$), the crossfall or camber should be 2.5% falling from the centre of single carriageways, or the central reserve of dual carriageways, to the outer channels.

NOTE 1 Document CG 501 [Ref 1.I] provides further advice on the design of crossfall for highway drainage.

NOTE 2 It can be necessary to eliminate adverse camber on larger radii for drainage reasons.

4.2 For curves with radii less than those shown in Table 2.10 (Minimum R with superelevation of 2.5%), (i.e. $V^2/r > 7$) superelevation shall be provided in accordance with Equation 4.2 subject to maximum values for rural and urban roads.

Equation 4.2 Superelevation

$$S = \frac{V^2}{2.828R}$$

where:

V	Design speed (kph)
R	Radius (metres)
S	Superelevation (%)

4.3 In rural areas superelevation shall not exceed 7% except on:

1) existing roads, or
2) connector road loops (see CD 122 [Ref 3.N]).

4.4 In urban areas the maximum superelevation shall be 5%.

NOTE The maximum superelevation in urban areas is influenced by the need to accommodate at-grade junctions and accesses.

Relaxations

4.5 Except for the restrictions to relaxations noted in Section 2 (Relaxations) of this document and in the clauses below, relaxations to the desirable minimum horizontal alignment requirements shall be permitted as identified in Table 4.5.

Table 4.5 Number of steps permitted below desirable minimum - horizontal alignment

Road type	Design speed band	Permitted relaxation
Motorways	Band A	2 steps
Motorways	Band B	3 steps
All-purpose	Band A	3 steps
All-purpose	Band B	4 steps

4.6 Further relaxations of 1 design speed step from those shown in Table 4.5 shall be permitted for band B roads at, and immediately before the top of up gradients on single carriageways steeper than 4% and longer than 1.5 km.

Downloaded from https://www.standardsforhighways.co.uk on 07-Aug-2023, CD 109 , published: Mar-2020

NOTE *At locations immediately before the top of gradients the scope for relaxations can be extended due to reduced speeds uphill.*

4.7 The permitted relaxations identified in Table 4.5 shall be reduced by 1 design speed step for band B roads:

1) on, and immediately following long grades on dual carriageways steeper than 3% and longer than 1.5km;
2) immediately following an overtaking section on single carriageway roads.

NOTE *At locations following long grades on dual carriageways and following overtaking sections on single carriageways the scope for relaxations is reduced due to the potential for increased vehicle speeds.*

Application of superelevation

4.8 Superelevation shall not be introduced, nor adverse camber removed, so gradually as to create large flat areas of carriageway, nor so sharply as to cause road user discomfort due to the change in carriageway profile.

NOTE *Progressive superelevation or removal of adverse camber can be achieved over the length of the transition curve, from the arc end, where transitions are provided.*

4.8.1 The carriageway edge profile should not vary in grade by more than 1% from the line about which the carriageway is pivoted.

4.8.2 On motorways, a smoother edge profile should be provided by reducing the variation in grade of the edge profile to a maximum of 0.5% where practicable, i.e. where local drainage conditions permit.

4.8.3 A minimum longitudinal gradient of at least 0.5% should be maintained wherever superelevation is to be applied or reversed.

NOTE 1 *In some locations the application of superelevation can lead to drainage problems, options for mitigating against potential drainage problems can include:*

1) modifying the horizontal alignment to move the superelevation area,
2) increasing the variation in grade of the edge profile, or
3) applying a rolling crown.

NOTE 2 *Situations where the superelevation can lead to drainage problems include locations where the superelevation is applied against the longitudinal gradient.*

4.9 For improvements to existing roads without transitions, between half and two thirds of the superelevation shall be introduced on the approach straight with the remainder provided at the beginning of the curve.

Widening on curves

4.10 For carriageways of standard width as defined in CD 127 [Ref 1.N], an increase of 0.3 metre per lane shall be provided when the horizontal radius is greater than 90 metres but below 150 metres.

NOTE *Two lane roads of width greater than 7.9 metres require no additional lane widening when the horizontal radius is greater than 90 metres but below 150 metres.*

4.11 For carriageways less than the standard widths as defined in CD 127 [Ref 1.N], widening shall be:

1) 0.6 metres per lane where the radius is greater than 90 metres but below 150 metres subject to maximum carriageway widths of 7.9 metres, 11.9 metres and 15.8 metres (for 2, 3 and 4 lanes carriageways respectively);
2) 0.5 metres per lane where the radius is between 150 metres and 300 metres, subject to a maximum width not being greater than the standard lane widths in CD 127 [Ref 1.N];
3) 0.3 metres per lane, where the radius is between 300 metres and 400 metres subject to a maximum width not greater than the standard lane widths in CD 127 [Ref 1.N].

Downloaded from https://www.standardsforhighways.co.uk on 07-Aug-2023, CD 109 , published: Mar-2020

NOTE 1 *Widening of curves on links, including where the mainline passes through junctions, need to be provided for carriageways of less than standard width and for low radius curves of standard width.*

NOTE 2 *Widening on curves is provided to allow for the swept path of long vehicles.*

4.11.1 Where curve widening is applied, the extra lane width should be applied uniformly along the transition curve where a transition curve is provided.

4.11.2 Where curve widening is applied as an improvement to an existing curve, the widening should be applied on the inside of the curve.

Transitions

4.12 Transition curves shall be provided on curves with radii less than shown in Table 2.10 (minimum R with adverse camber and without transitions).

NOTE *The calculation of transition curves is a two-step process where firstly the length of basic transition is calculated using Equation 4.13 then the results of this calculation are compared with a further calculation using √(24R).*

Length of curve:

4.13 The length of basic transition curves shall be derived from the formula:

Equation 4.13 Calculation of basic transition length

$$L = \frac{V^3}{46.7qR}$$

where:

L =	Length of basic transition (metres)
V =	Design speed (kph)
q =	Rate of increase of centripetal acceleration (metres / sec³) travelling along curve at constant speed V (kph)
R =	Radius of curve (metres)

4.14 The value of q used in the basic transition length calculation shall not exceed 0.6 metres / sec³.

4.14.1 The value of q used in the basic transition length calculation should not exceed 0.3 metres / sec³.

4.15 Where the results of the calculation of basic transition length gives a value less than √(24R) metres, the basic transition length calculated by the formula shall be used.

4.15.1 Where the results of the calculation of basic transition length gives a value greater than √(24R) metres, the √(24R) metres value should be used.

NOTE 1 *Where a transition length of √(24R) is used this can result in a transition curve with a q value greater than 0.6 metres / sec³.*

NOTE 2 *The use of transition lengths in excess of √(24R) metres can create flat areas of carriageway resulting in drainage issues.*

4.15.2 Where the basic transition appropriate to the design speed results in insufficient transition length to accommodate superelevation turnover, longer transitions to match the superelevation design should be provided.

Downloaded from https://www.standardsforhighways.co.uk on 07-Aug-2023, CD 109 , published: Mar-2020

5. Vertical alignment

Gradients

5.1 Longitudinal gradients of links shall not exceed the permitted relaxation values given in Table 5.1.

Table 5.1 Desirable maximum and permitted relaxations to gradients

	Desirable maximum	Permitted relaxations
Motorways	3%	4%
All-purpose dual carriageways	4%	8%
All-purpose single carriageways	6%	8%

5.1.1 Wherever practicable desirable maximum values for longitudinal gradients of links should not be exceeded.

NOTE Climbing lanes (see Sections 7 and 8 of this document) can be appropriate for gradients above 2% on single carriageway and for gradients of 3% and above on dual carriageways.

Minimum gradient

5.2 On kerbed roads with a minimum gradient of 0.5% the drainage path shall be provided by false channel paths.

5.2.1 In flatter areas, the vertical alignment should not be manipulated by the introduction of vertical curvature simply to achieve the required surface water drainage gradients.

NOTE The creation of false channel paths involves providing a drainage path steeper than the adjacent road surface gradient. Methods of achieving this can include providing kerb units with integral drainage channels.

5.2.2 The desirable minimum gradient for a kerbed road should be 0.5% to enable effective drainage.

5.2.3 Where kerbs are inappropriate, false channel paths may be avoided by using over-edge drainage.

Vertical curves

General

5.3 Vertical curves shall be provided at all changes in gradient.

NOTE The use of permitted vertical curve parameters normally results in compliance with the visibility requirements; however, the horizontal alignment of the road, the presence of crossfall, superelevation or verge treatment and features such as signs, vehicle restraint systems and structures adjacent to the carriageway can affect the interaction between vertical curvature and visibility. Therefore stopping sight distance still needs to be checked.

Crest curves

5.4 The lengths of vertical crest curves shall be determined by multiplying the K values shown in Table 2.10 by the algebraic change of gradient expressed as a percentage.

NOTE 1 As an example, the length of crest curve connecting a gradient of +3% with a gradient of -2% on a road with a design speed of 120kph would be calculated in the following way. The difference between the +3% gradient and the -2% gradient creates a total grade change of 5%. For a design speed of 120 kph, the desirable minimum K value obtained from Table 2.10 is 182. Multiplying the grade change by the K value (5 x 182) gives a vertical crest curve length of 910 metres.

NOTE 2 There are two factors that affect the choice of crest curvature: these are visibility and comfort. The crest in the road can restrict forward visibility to the desirable minimum stopping sight distance before driver comfort is affected.

Downloaded from https://www.standardsforhighways.co.uk on 07-Aug-2023, CD 109 , published: Mar-2020

Sag curves

5.5 The lengths of vertical sag curves shall be determined by multiplying the K values shown in Table 2.10 by the algebraic change of gradient expressed as a percentage.

NOTE 1 As an example, the length of sag curve connecting a gradient of +3% with a gradient of -2% on a road with a design speed of 120kph would be calculated in the following way. The difference between the +3% gradient and the-2% gradient creates a total grade change of 5%. For a design speed of 120 kph, the desirable minimum K value obtained from Table 2.10 is 37. Multiplying the grade change by the K value (5 x 37) gives a vertical sag curve length of 185 metres.

NOTE 2 The provision of sag curves based on desirable minimum K values does not usually result in obstruction to stopping sight distance (unless overbridges, signs or other features are present). Road user comfort is usually affected before desirable minimum stopping sight distance is impacted.

Relaxations

Crest curves

5.6 Except for the restrictions to relaxations noted in Section 2 (Relaxations) of this document and in the clauses below, relaxations to the desirable minimum crest curve requirements shall be permitted as identified in Table 5.7.

5.7 Further relaxations to those shown in Table 5.7 shall be permitted as follows:

1) on, and immediately following the top of up gradients on single carriageways steeper than 4% and longer than 1.5 km, the scope for relaxations can be extended by 1 step due to reduced speeds uphill;
2) for band A roads when the crest curve is within a straight section the scope for relaxations can be extended by 1 design speed step.

Table 5.7 Number of steps permitted below desirable minimum - crest curves

Road type	Design speed band	Permitted relaxation
Motorways	Band A	1 step
Motorways	Band B	2 steps
All-purpose	Band A	2 steps
All-purpose	Band B	3 steps

5.8 The permitted relaxations identified in Table 5.7 shall be reduced by 1 design speed step immediately following an overtaking section on single carriageway roads.

Sag curves

5.9 Except for the restrictions to relaxations noted in Section 2 (Relaxations) of this document and in the clauses below, relaxations to the desirable minimum sag curve requirements shall be permitted as identified in Table 5.9.

Table 5.9 Number of steps permitted below desirable minimum - sag curves

Road Type	Permitted relaxation
Motorways	None
All-purpose 50B, 60B, and 70B	2 steps
All-purpose all others	1 step

5.10 The permitted relaxations identified in Table 5.9 shall be extended by 1 design speed step for design speeds of 70kph and less where the road is illuminated.

Downloaded from https://www.standardsforhighways.co.uk on 07-Aug-2023, CD 109 , published: Mar-2020

5.11 The permitted relaxations identified in Table 5.9 shall be reduced by 1 design speed step for roads in design speed bands 50B, 60B and 70B immediately following an overtaking section on single carriageway roads.

Downloaded from https://www.standardsforhighways.co.uk on 07-Aug-2023, CD 109 , published: Mar-2020

6. Wide single 2+1 roads

Design principles

6.1 Wide single 2+1 (WS2+1) roads shall only apply to rural all-purpose single carriageway roads.

6.1.1 WS2+1 roads should only be used for routes with a traffic flow of up to 25,000 vehicles annual average daily traffic (AADT).

6.1.2 Factors such as the number of accesses, junction spacing, grade separation and gradient can have a significant impact on the design of a WS2+1 road, therefore reference should be made to CD 123 [Ref 2.N] and Section 5 of this document.

6.1.3 Individual sections of WS2+1 road providing overtaking opportunities in one direction (i.e. without changeovers) may be introduced within standard single carriageway roads or wide single roads.

6.1.4 Where individual sections of WS2+1 are provided, overtaking opportunities should also be available in the opposite direction as part of a route strategy, see Section 9 of this document.

NOTE Overtaking opportunities can be achieved by the provision of additional WS2+1 sections in close proximity, as illustrated in Figure 6.1.4N.

Figure 6.1.4N Individual sections of WS2+1 road providing overtaking opportunities in one direction

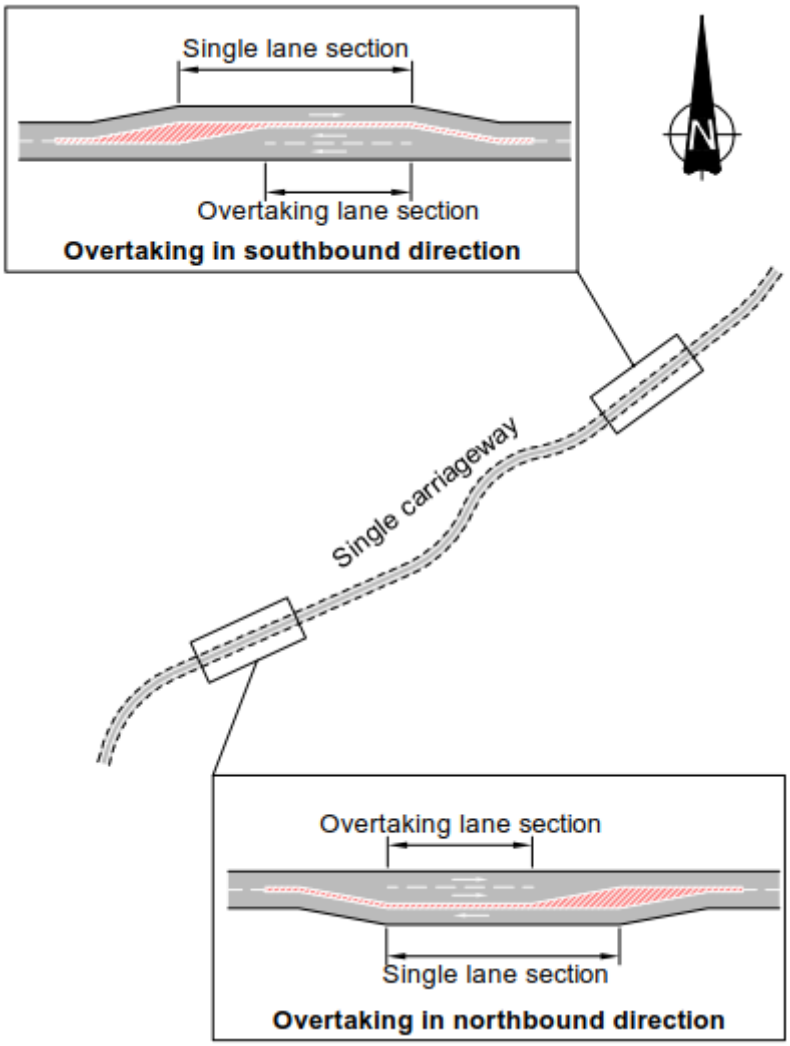

6.2 For existing single carriageway roads converted to WS2+1, where desirable minimum stopping sight

Downloaded from https://www.standardsforhighways.co.uk on 07-Aug-2023, CD 109 , published: Mar-2020

distance is available, the provision of section C curves shall be permitted.

NOTE *The horizontal and vertical alignment design parameters for single carriageway roads, given in this document, apply to the design of WS2+1 roads.*

6.3 Direct interfaces between WS2+1 roads and dual carriageways shall not be permitted unless the interface occurs at a roundabout.

6.4 Where a roundabout does not provide a direct interface between a WS2+1 road and a dual carriageway, a 2km section of single carriageway shall be provided between the WS2+1 layout and the dual carriageway section.

NOTE 1 *Overtaking lane sections can start directly at the exit from the roundabout.*

NOTE 2 *Where there is a need to provide overtaking opportunities on a single carriageway road at an isolated uphill gradient of greater than 2% and longer than 500 metres, Section 7 of this document provides requirements and advice for providing climbing lanes.*

Geometric standards

Cross-section

6.5 On sections of WS2+1 between junctions, the crown of the road shall be located within the double white lines and not within traffic lanes.

NOTE *For requirements and advice for cross-sectional elements of WS2+1 roads see CD 127 [Ref 1.N].*

6.5.1 When improving existing roads at restricted locations, the cross-section may be reduced by the use of a changeover to omit the overtaking lane as shown in Figure 6.5.1.

Downloaded from https://www.standardsforhighways.co.uk on 07-Aug-2023, CD 109 , published: Mar-2020

Downloaded from https://www.standardsforhighways.co.uk on 07-Aug-2023, CD 109 , published: Mar-2020

Figure 6.5.1 Removal of overtaking lanes at restricted locations

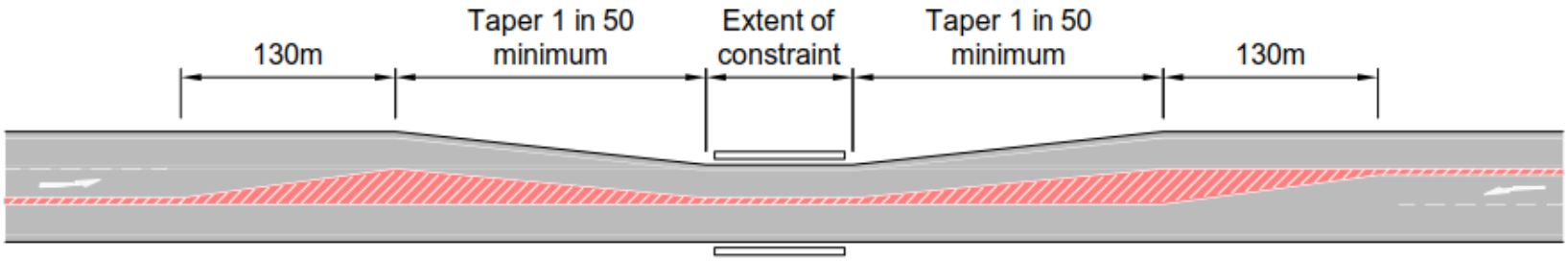

a) Conflicting changeover

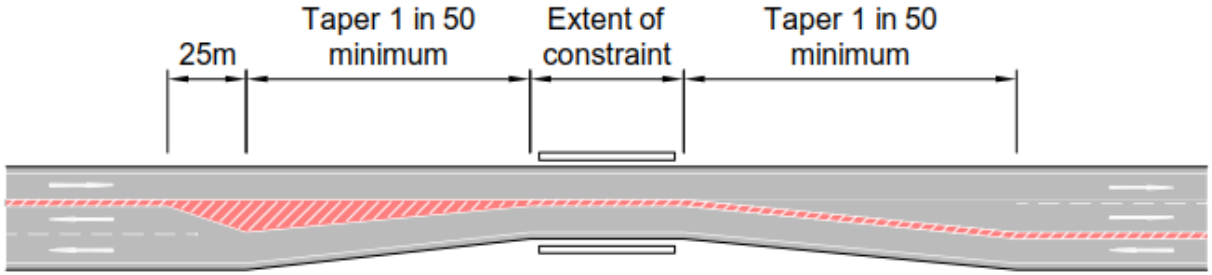

b) Non-conflicting changeover

6.5.2 Where a changeover is provided to remove the overtaking lane at a constrained location, the double white line system should be continued through the restricted location as illustrated in Figure 6.5.1.

Lengths of overtaking lane sections

6.6 The minimum length of an overtaking lane section shall be 800 metres (see Figure 6.1.4N and Figure 6.7).

6.7 The maximum length of an overtaking lane section shall be 1500 metres.

Figure 6.7 Typical layout of a WS2+1 road with changeover

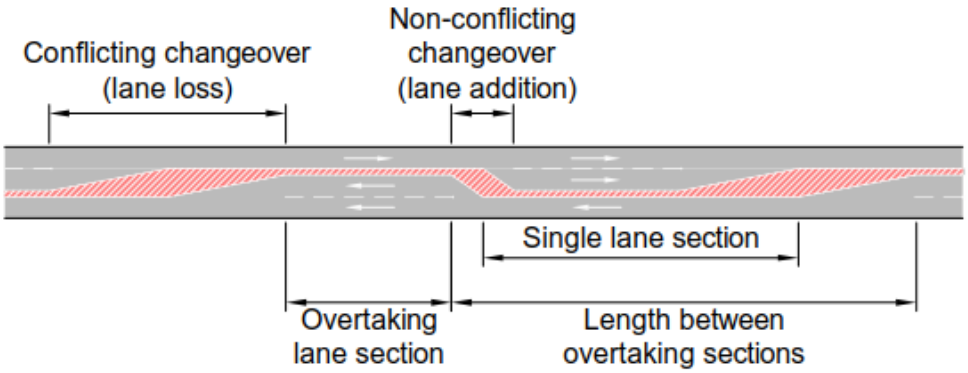

NOTE Overtaking lane sections between 800 metres and 1500 metres in length provide sufficient length to disperse platoons of traffic but are not so long as to cause frustration for drivers in the single lane section.

Changeovers

6.8 Where changeovers are remote from junctions they shall be in accordance with the layouts shown in Figure 6.8.

Downloaded from https://www.standardsforhighways.co.uk on 07-Aug-2023, CD 109 , published: Mar-2020

Figure 6.8 Dimension of changeovers

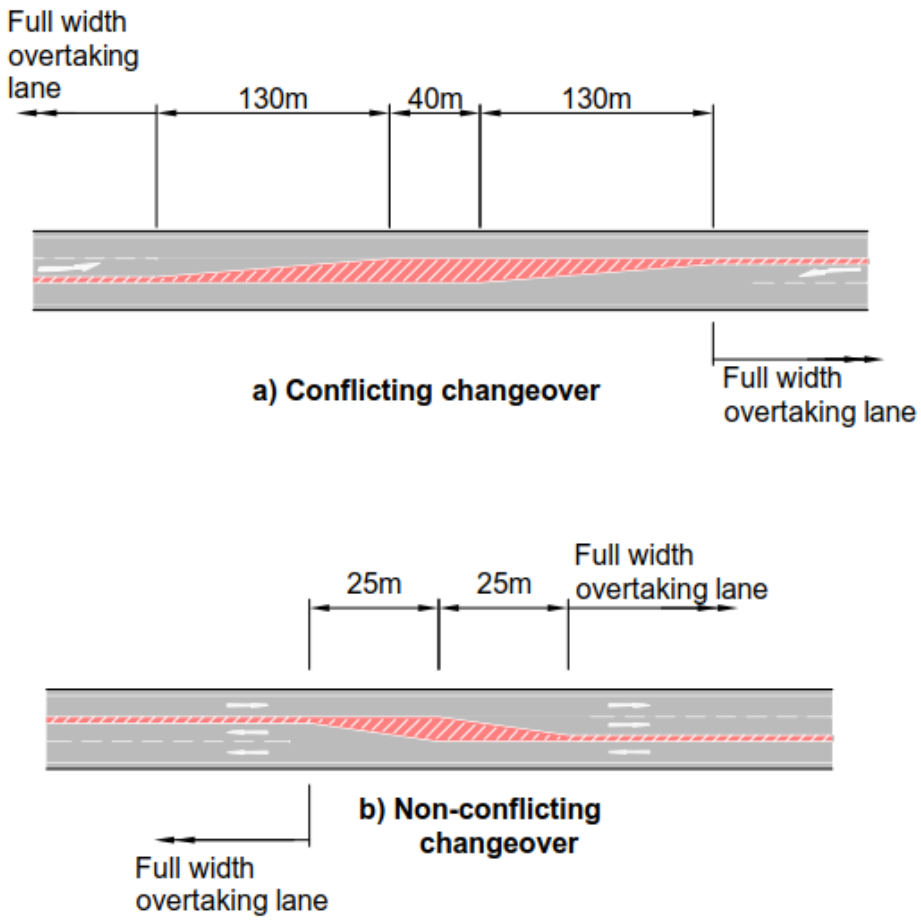

NOTE *Details of layouts where junctions are incorporated in changeovers are given in CD 123 [Ref 2.N].*

6.9 Conflicting changeovers shall not be located where the curve radius falls within section C or below of Figure 9.24N2 (see Section 9 of this document).

6.10 At least desirable minimum stopping sight distance shall be provided on the immediate approach to and through all changeovers.

NOTE *For the purposes of this document, the immediate approach to a changeover is the length of carriageway from a point 1.5 times the desirable minimum stopping sight distance upstream of the start of the changeover taper through the changeover to a point where the cross-section returns to the standard WS 2+1 layout (as defined in CD 127 [Ref 1.N]).*

WS2+1 interfaces

6.11 WS2+1 interfaces shall not coincide with horizontal curves less than the required desirable minimum radius for the link as identified in Section 2 of this document.

6.11.1 Where a WS2+1 carriageway terminates, the same standards of horizontal and vertical alignment and visibility that apply to the WS2+1 road as defined in Sections 2 to 5 of this document should be applied to the length of two lane single carriageway road within 1.5 times desirable minimum stopping sight distance of the WS2+1 interface.

6.11.2 The layout at the start of a section of WS2+1 road should be designed by widening to the right-hand side (from the perspective of traffic entering the WS 2+1 overtaking section), as shown in Figure 6.11.2.

Downloaded from https://www.standardsforhighways.co.uk on 07-Aug-2023, CD 109 , published: Mar-2020

Figure 6.11.2 WS2+1 start of overtaking lane section with widening on right-hand side

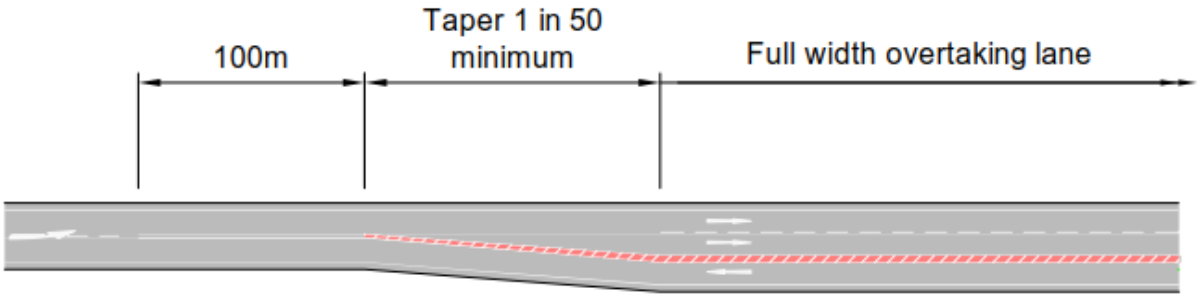

NOTE *The widening of the nearside channel to the right-hand side encourages drivers to maintain their position on the nearside.*

6.11.3 Where physical constraints necessitate widening to the left-hand side (from the perspective of traffic entering the WS 2+1 overtaking section), the layout should guide traffic into the left hand lane, as shown in Figure 6.11.3.

Figure 6.11.3 WS2+1 start of overtaking lane section with widening on left-hand side

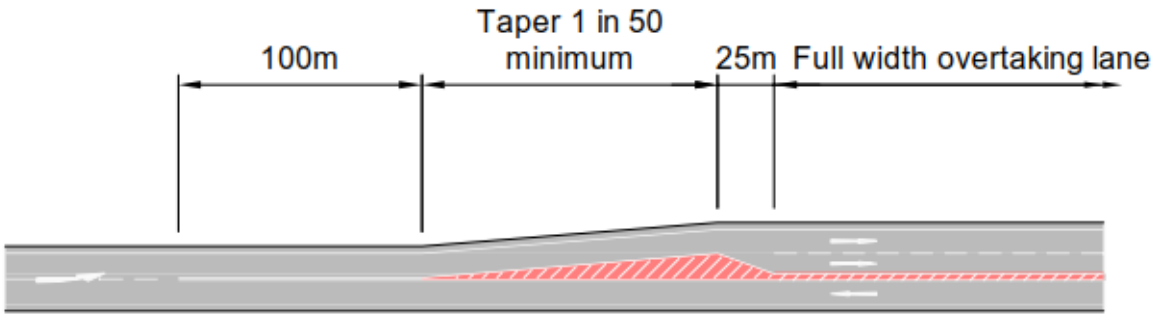

6.11.4 The layout for a WS2+1 interface where the WS2+1 road ends at a single lane section should be as shown in Figure 6.11.4.

Figure 6.11.4 WS2+1 end of overtaking lane section

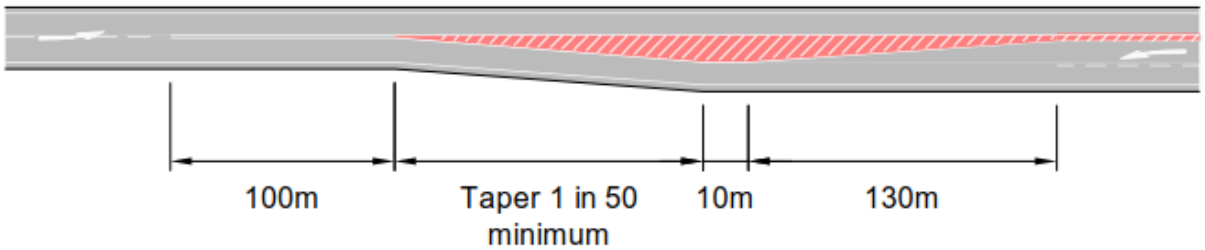

Traffic signs and road markings

6.12 Traffic signs to TSRGD 2016 [Ref 6.N] diagram 521 (schedule 2, part 2, item 16), prescribed to indicate the resumption of two-way traffic at the end of a dual carriageway road, shall not be used.

6.12.1 Traffic signs and road markings that should be used on WS2+1 roads are shown in Figure 6.12.1a to 6.12.1d.

Downloaded from https://www.standardsforhighways.co.uk on 07-Aug-2023, CD 109 , published: Mar-2020

Downloaded from https://www.standardsforhighways.co.uk on 07-Aug-2023, CD 109 , published: Mar-2020

Figure 6.12.1a Traffic signs and road markings at WS2+1 interface (commencing on single lane section)

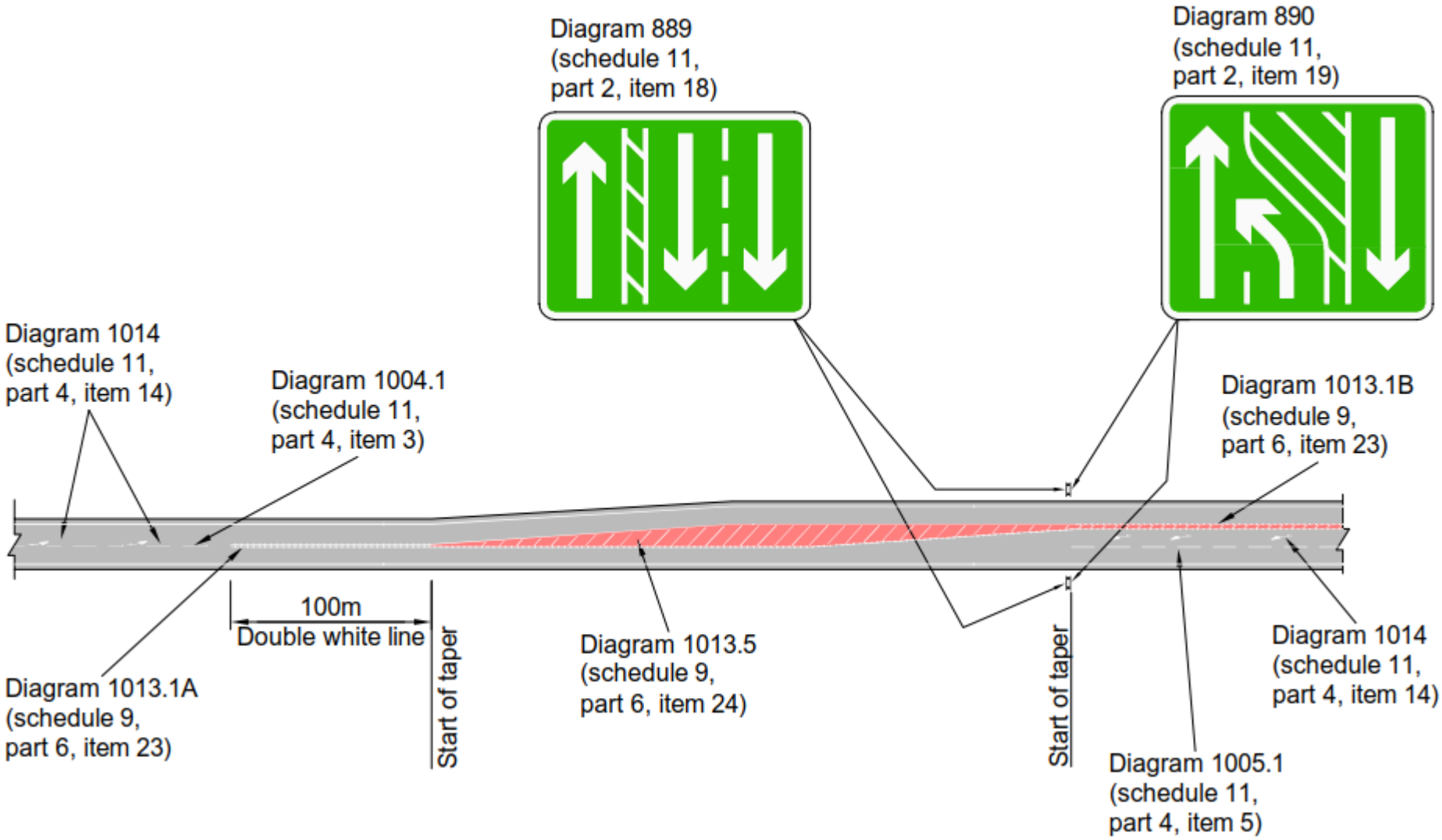

Downloaded from https://www.standardsforhighways.co.uk on 07-Aug-2023, CD 109 , published: Mar-2020

Figure 6.12.1b Traffic signs and road markings at WS2+1 interface (commencing on overtaking lane section)

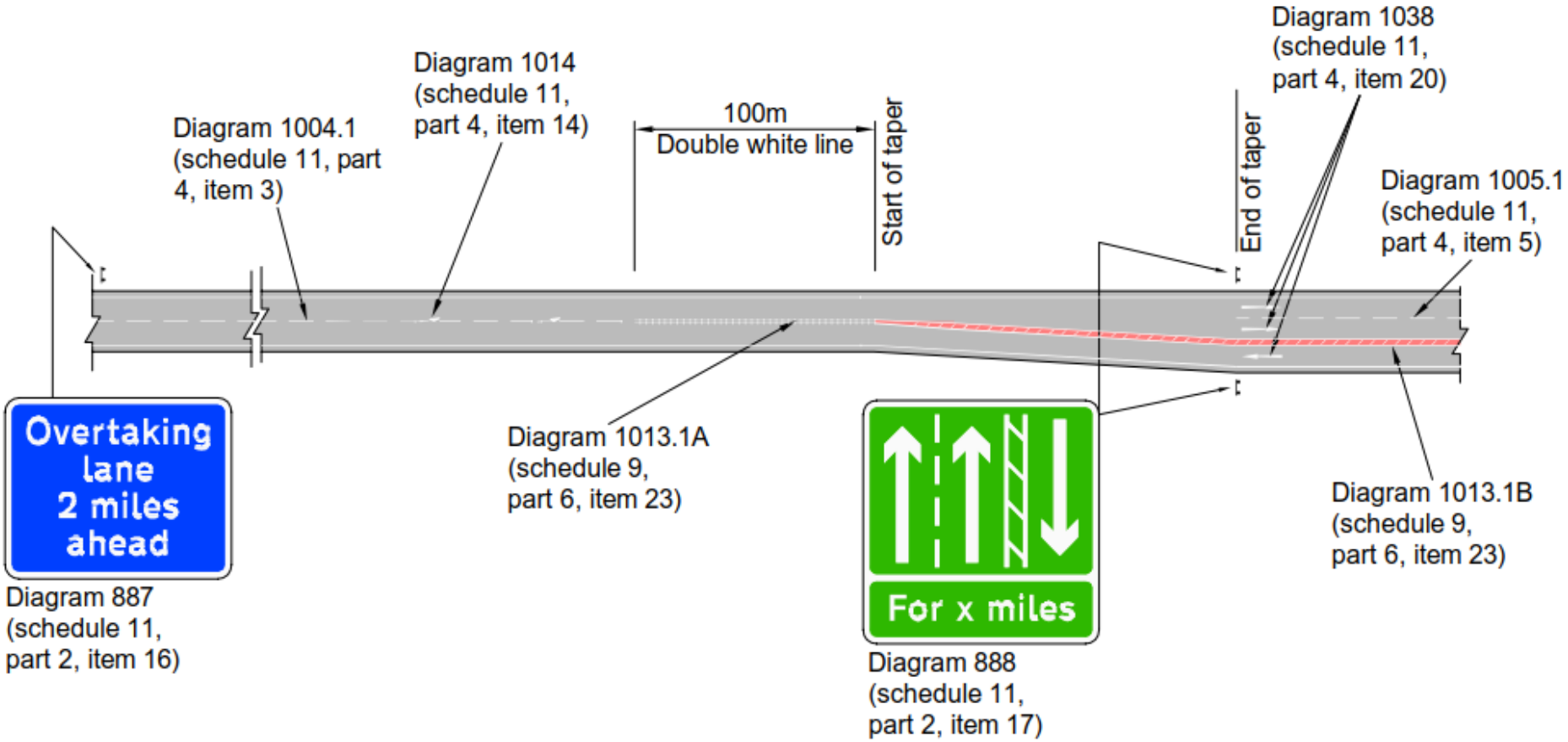

Downloaded from https://www.standardsforhighways.co.uk on 07-Aug-2023, CD 109 , published: Mar-2020

Figure 6.12.1c Traffic signs and road markings at a conflicting changeover

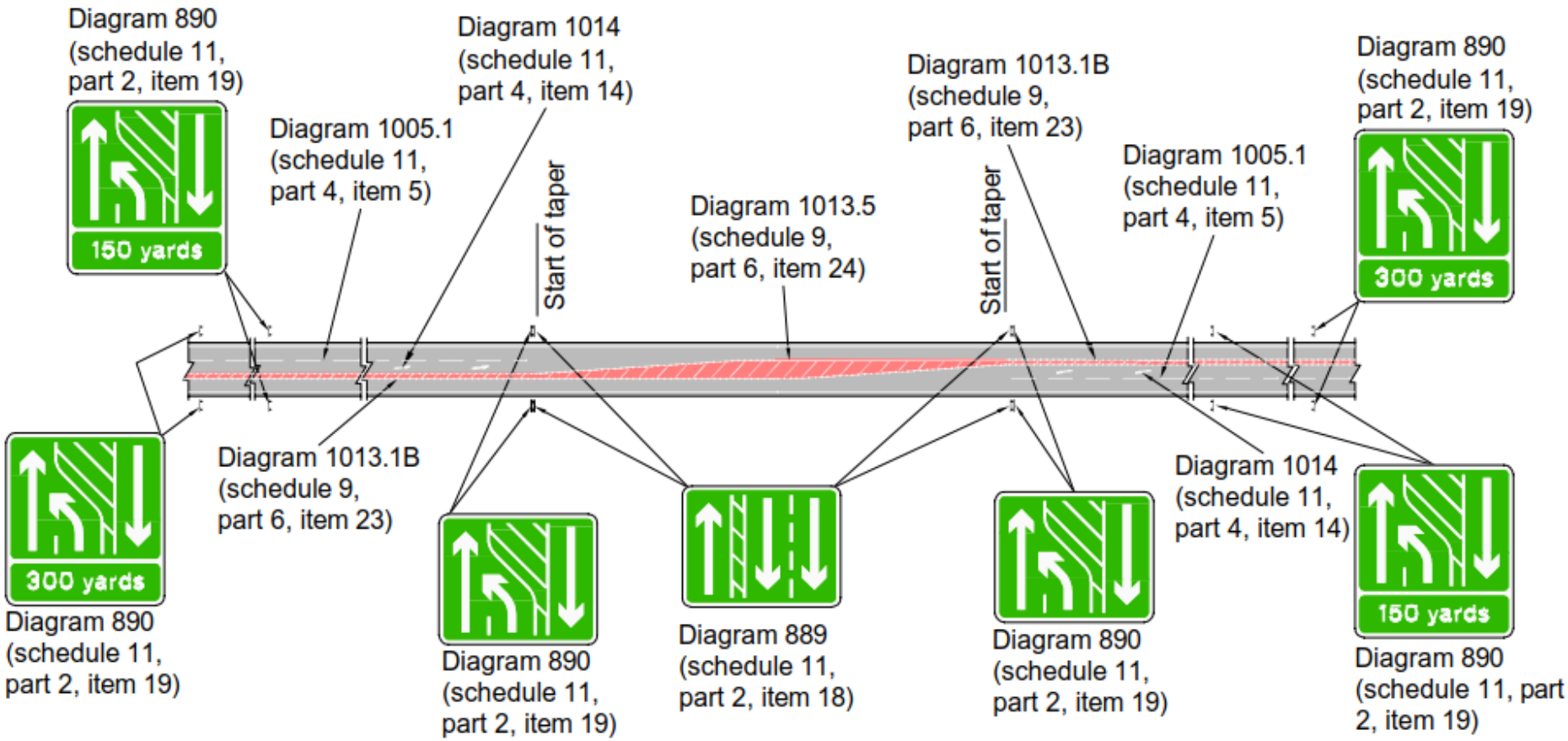

Downloaded from https://www.standardsforhighways.co.uk on 07-Aug-2023, CD 109 , published: Mar-2020

Figure 6.12.1d Traffic signs and road markings at a non-conflicting changeover

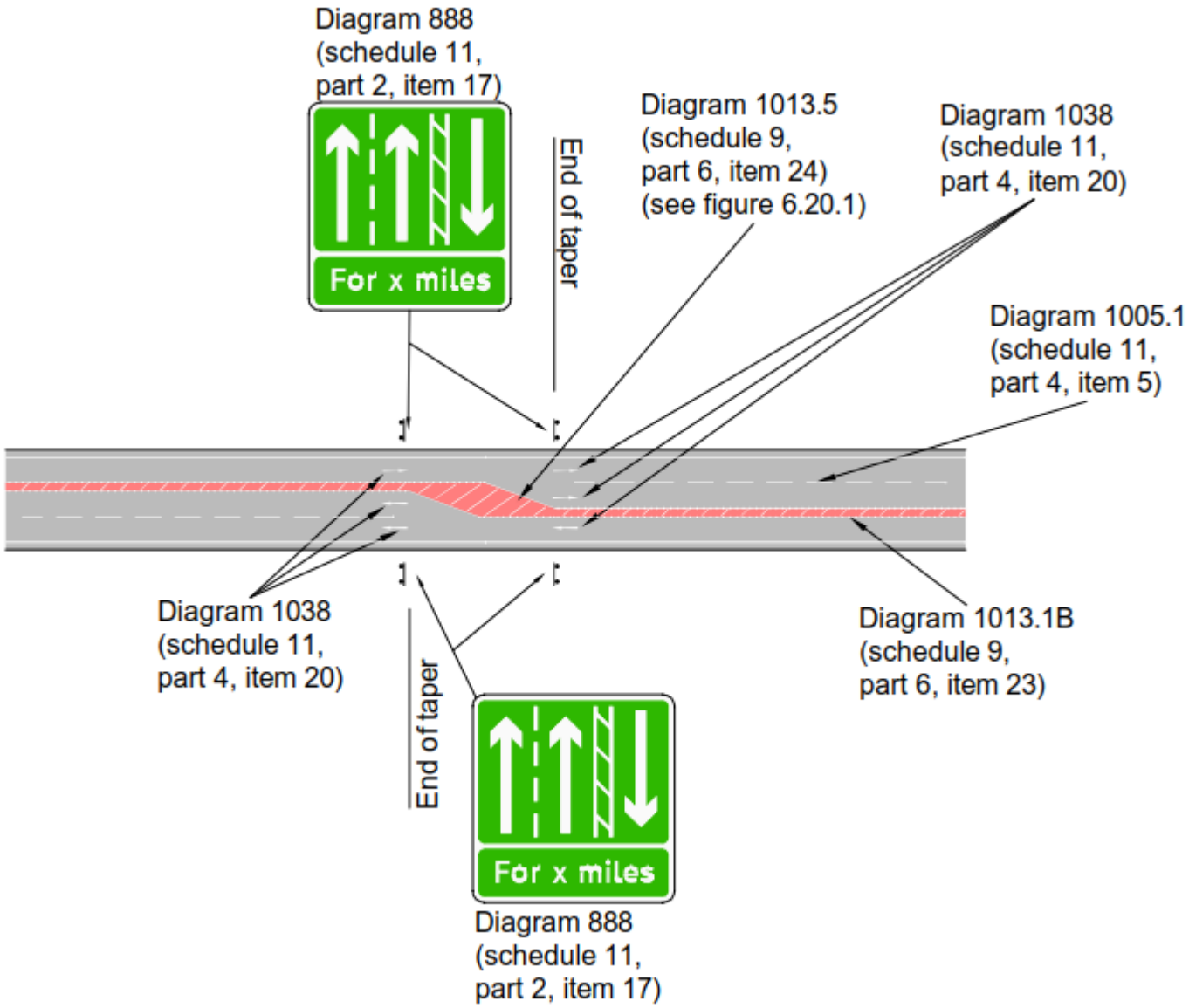

NOTE 1 *Diagram numbers shown in Figures 6.12.1a to 6.12.1d refer to TSRGD 2016 [Ref 6.N].*

NOTE 2 *Arrow road markings to TSRGD 2016 [Ref 6.N] diagram 1014 (schedule 11, part 4, item 14) are to be place in accordance with the TSM Chapter 5 [Ref 9.N].*

NOTE 3 *Road studs are to be placed in accordance with TSRGD 2016 [Ref 6.N] and TSM Chapter 5 [Ref 9.N].*

NOTE 4 *See TSM Chapter 4 [Ref 8.N] for distance information on informatory traffic signs.*

6.12.2 Advance information up to a distance of two miles prior to the start of the overtaking lane section may be given by the use of the signs shown in Figure 6.12.1b.

NOTE *Traffic signs as shown in Figure 6.12.1b can reduce frustration and encourage drivers to delay overtaking until the overtaking lane section is reached.*

6.12.3 Traffic signs as shown in Figure 6.12.1a should be used at the WS2+1 interface.

NOTE *At priority junctions, traffic signs and road markings are such that drivers do not confuse the right turning lane with the start of an overtaking lane section.*

6.13 The double white line road marking system separating the directions of flow on a WS2+1 road shall be to TSRGD 2016 [Ref 6.N] diagram 1013.1B (schedule 9, part 6, item 23).

6.14 The width of the road marking to TSRGD 2016 [Ref 6.N] diagram 1013.1B (schedule 9, part 6, item 23) shall be 1.0 metre including white lines.

6.15 Road marking to TSRGD 2016 [Ref 6.N] diagram 1013.1B (schedule 9, part 6, item 23) shall incorporate differential coloured surfacing.

6.16 The white line for the TSRGD 2016 [Ref 6.N] diagram 1013.1B (schedule 9, part 6, item 23) shall be 150mm wide.

6.17 At changeovers, interfaces and junctions, the road marking to TSRGD 2016 [Ref 6.N] diagram 1013.1B (schedule 9, part 6, item 23) shall change to the wider road marking to TSRGD 2016 [Ref 6.N] diagram 1013.5 (schedule 9, part 6, item 24) as shown in Figures 6.12.1a to 6.12.1d and 6.17.1.

6.17.1 Road markings to TSRGD 2016 [Ref 6.N] diagram 1013.1B (schedule 9, part 6, item 23) and 1013.5 (schedule 9, part 6, item 24) should be fitted with studs in pairs, within the width of each of the two lines, as shown in Figure 6.17.1 (also see TSM Chapter 5 [Ref 9.N]).

Downloaded from https://www.standardsforhighways.co.uk on 07-Aug-2023, CD 109 , published: Mar-2020

Figure 6.17.1 Interface between TSRGD diagram 1013.1B (shedule 9, part 6, item 23) and 1013.5 (shedule 9, part 6, item 24)

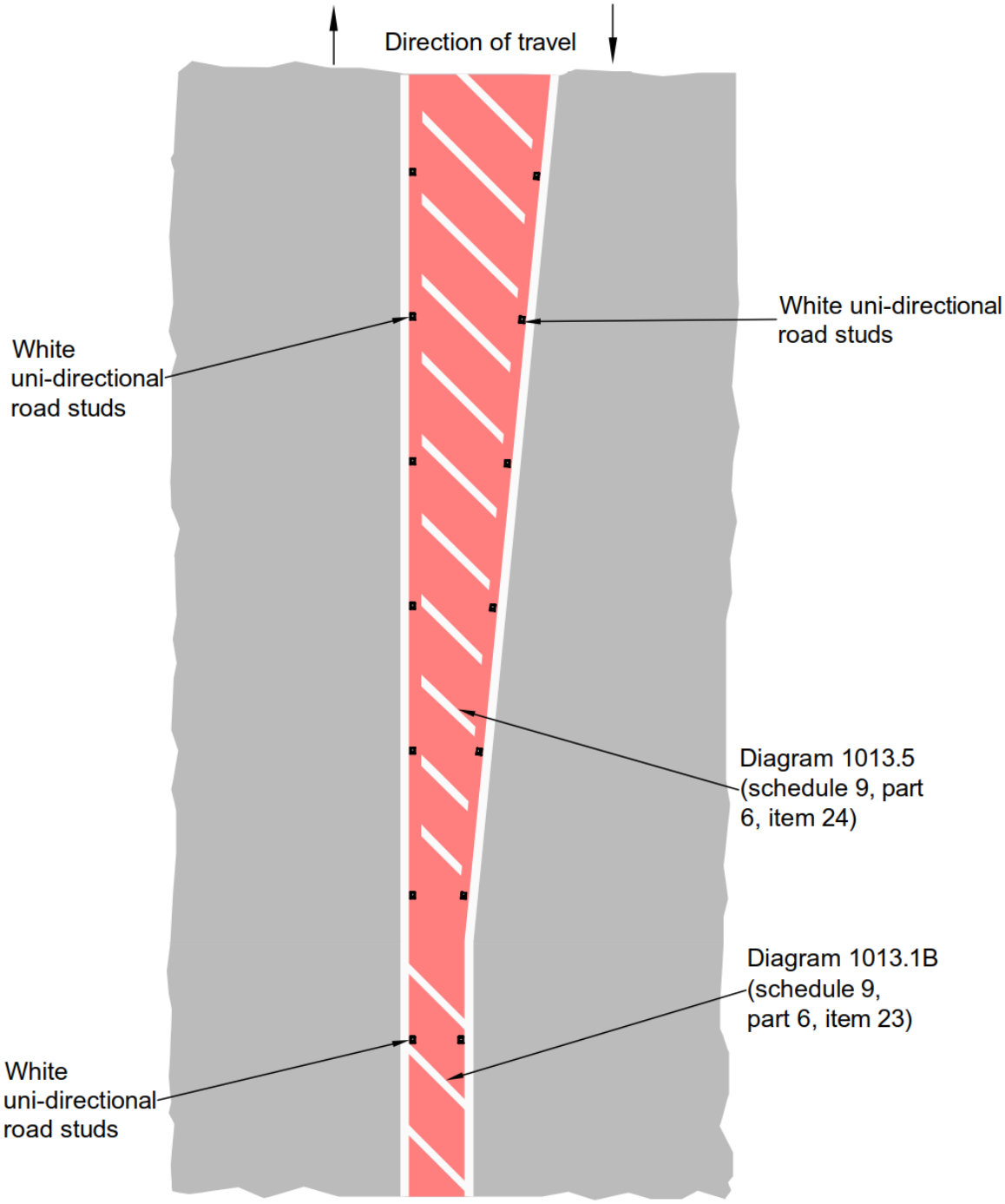

NOTE 1 *Diagram numbers shown in Figure 6.17.1 refer to TSRGD 2016 [Ref 6.N].*

NOTE 2 *Road studs are to be placed in accordance with TSRGD 2016 [Ref 6.N] and TSM Chapter 5 [Ref 9.N].*

6.17.2 The studs used in the road markings should be uni-directional so that only reflectors on the line of studs adjacent to the road users direction of travel face the road user.

Downloaded from https://www.standardsforhighways.co.uk on 07-Aug-2023, CD 109 , published: Mar-2020

7. Climbing lanes - single carriageways

Introduction

7.1 Where there is a need to provide overtaking opportunities on a single carriageway road at an isolated uphill gradient of greater than 2% and longer than 500 metres, the overtaking section shall be designed as a climbing lane.

7.2 This section shall be used for the design of climbing lanes on single carriageway all-purpose road schemes including improvements to the existing all-purpose trunk road network.

NOTE 1 For the widths of cross-sectional elements of single carriageway climbing lanes see CD 127 [Ref 1.N].

NOTE 2 For details of the layout of junctions on climbing lanes see CD 123 [Ref 2.N].

Layout

Layout at the start of a climbing lane

7.3 The full width of a climbing lane shall be provided at a point C, 100 metres uphill from the 2% point of sag curve, as shown in Figure 7.3.

Figure 7.3 Layout at the start of climbing lanes

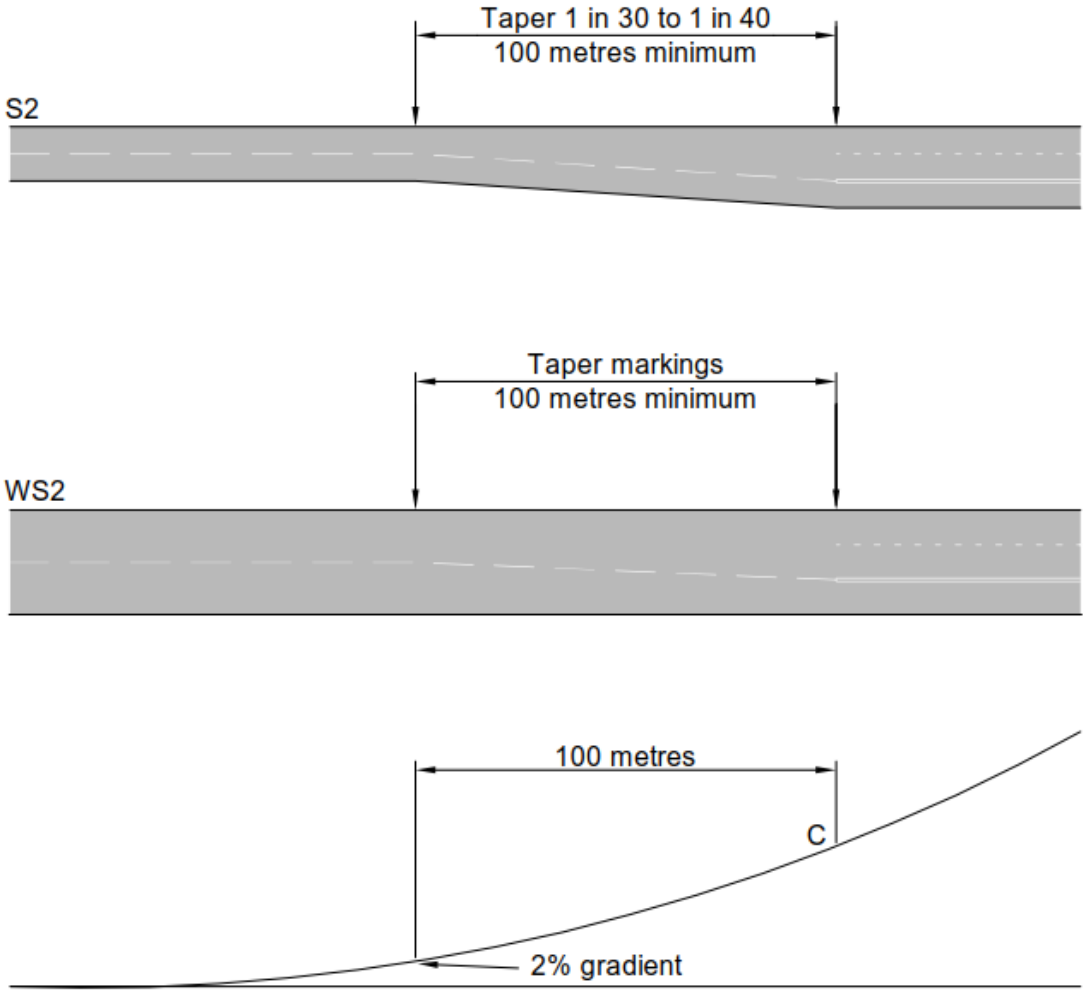

Downloaded from https://www.standardsforhighways.co.uk on 07-Aug-2023, CD 109 , published: Mar-2020

7.4 The full width of the climbing lane shall be preceded by a taper of between 1 in 30 and 1 in 40, as shown in Figure 7.3.

7.4.1 The alignment at the commencement of the climbing lane should encourage drivers to follow the nearside channel unless overtaking.

7.4.2 The taper should provide a smooth transition, by utilising the road curvature to develop the extra width, wherever practicable.

7.4.3 Climbing lanes may also commence directly from the exit lane of a roundabout where the geometry does not allow the use of conventional taper layout, as shown in Figure 7.4.3.

Figure 7.4.3 Climbing lane starts at roundabout exit - single carriageway

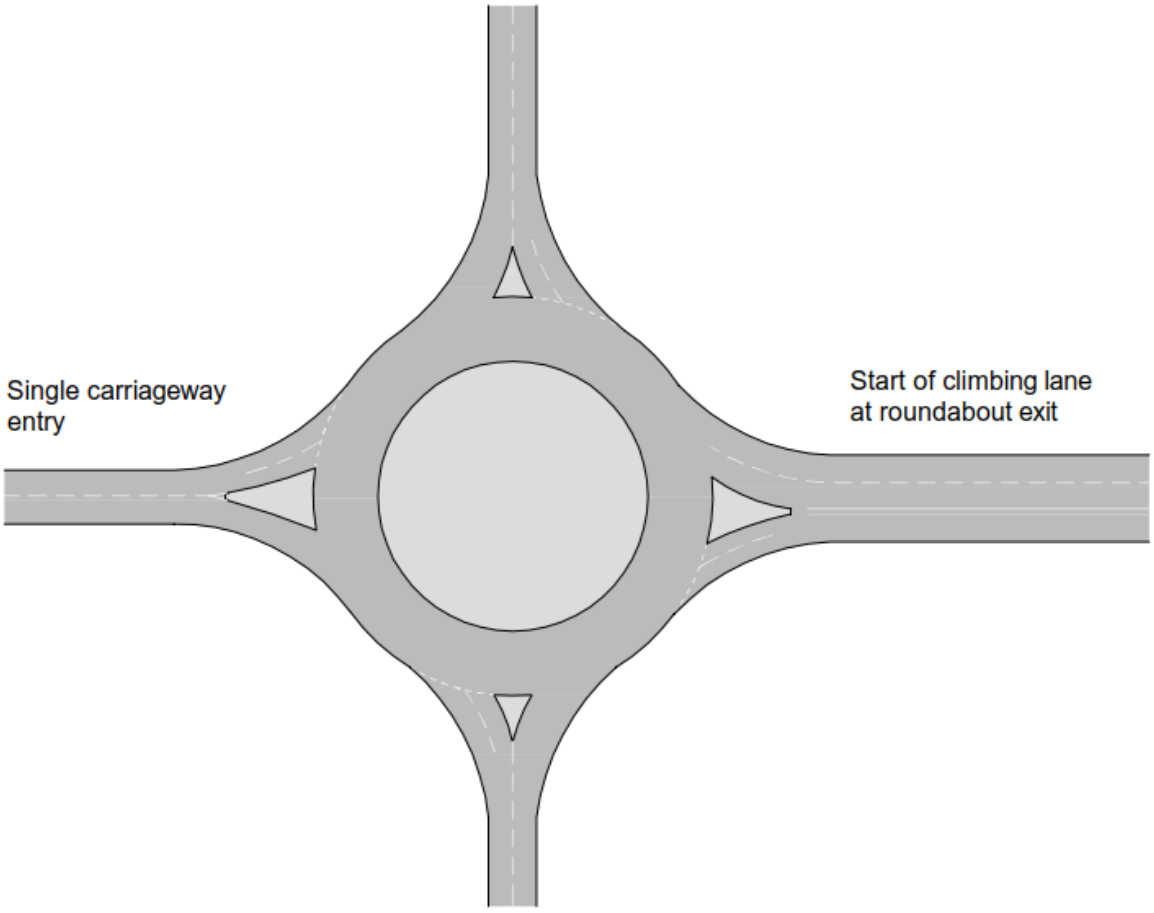

7.4.4 Where there are climbing lanes at both ends of a sag curve, and conditions can lead to a conventional 2 lane road layout between tapers which is less than 500 metres in length, the intervening carriageway paved width should be maintained at the same width as the climbing lanes section and road markings provided as shown in Figure 7.4.4.

Downloaded from https://www.standardsforhighways.co.uk on 07-Aug-2023, CD 109 , published: Mar-2020

Figure 7.4.4 Road markings at sags between climbing lanes

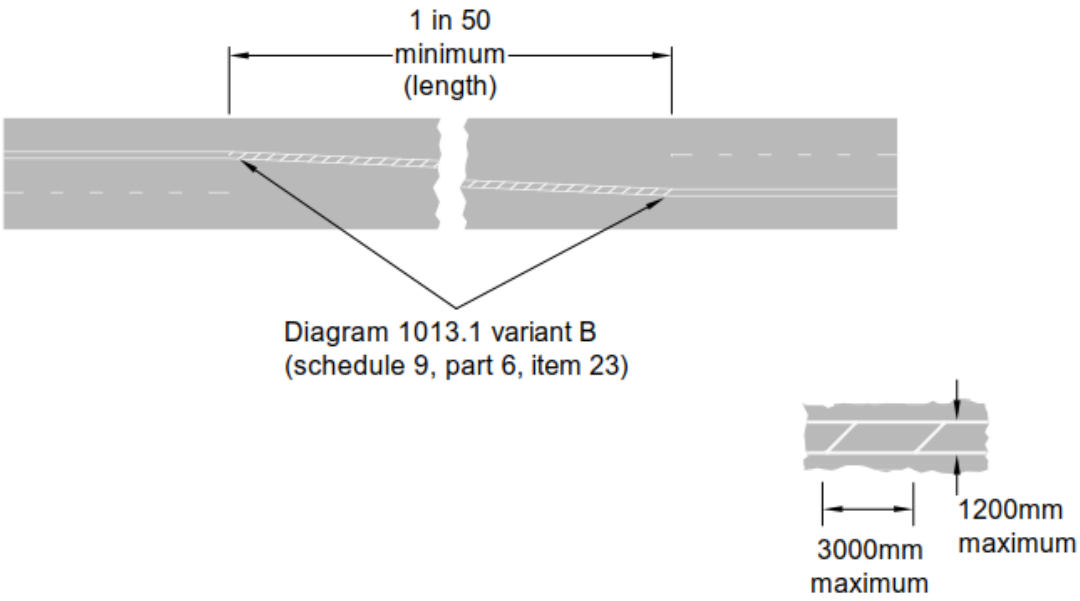

Layout at the end of climbing lane

7.5 The full width of the climbing lane shall be maintained up or down the gradient to a point F, at least 220 metres beyond the end of the 2% point of the crest curve as shown in Figure 7.5.

Downloaded from https://www.standardsforhighways.co.uk on 07-Aug-2023, CD 109 , published: Mar-2020

Downloaded from https://www.standardsforhighways.co.uk on 07-Aug-2023, CD 109 , published: Mar-2020

Figure 7.5 Layout at end of climbing lane

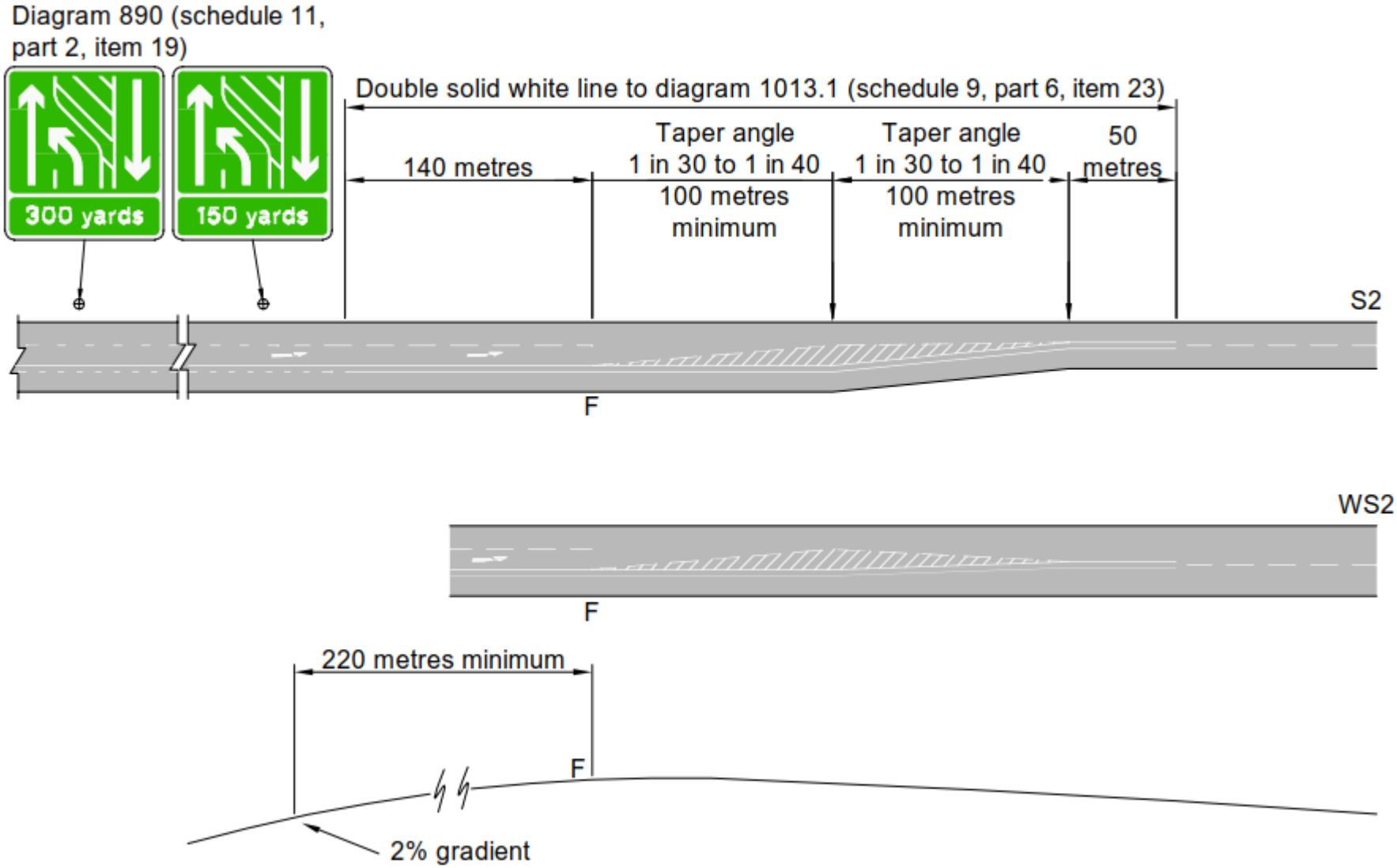

7.5.1 The distance between the 2% point and point F (the end of the full width of the climbing lane), should be extended beyond the minimum value if:

1) an existing junction is in the vicinity of the existing merge taper area and / or where the extension enables traffic to merge more safely;
2) the climbing lane is part of an overall route strategy for overtaking and the climbing lane is extended to maximise overtaking opportunities;
3) a high proportion of HGVs, or slow moving vehicles, currently cause problems or significantly reduce capacity in the merge taper area.

7.6 Commencing from point F, the carriageway shall be narrowed from the offside using a taper of between 1 in 30 and 1 in 40 in order to gradually remove the climbing lane (see Figure 7.5).

NOTE In situations where the climbing lane termination point is extended greater than 220 metres beyond the 2% point, the taper arrangement at the end of the climbing lane is the same as that of the climbing lane terminating at 220 metres beyond the 2% point.

7.7 Where a climbing lane terminates advance warning signs shall be provided in accordance with TSRGD 2016 [Ref 6.N] diagram 890 (schedule 11, part 2 item 19).

NOTE Clear signing and road markings at the end of a climbing lane is provided to ensure road users are fully aware of potential lane changing movements of other vehicles. This is important both from the point of view of the safety and efficient operation of the climbing lane.

7.7.1 The transition from a climbing lane to a single lane should not coincide with junctions or curves below desirable minimum radius for the design speed of the road.

7.7.2 The climbing lane may terminate at a roundabout so the overtaking lane becomes the right hand entry lane into the roundabout (see Figure 7.7.2).

Downloaded from https://www.standardsforhighways.co.uk on 07-Aug-2023, CD 109 , published: Mar-2020

Figure 7.7.2 Climbing Lane ends at roundabout entry - single carriageway

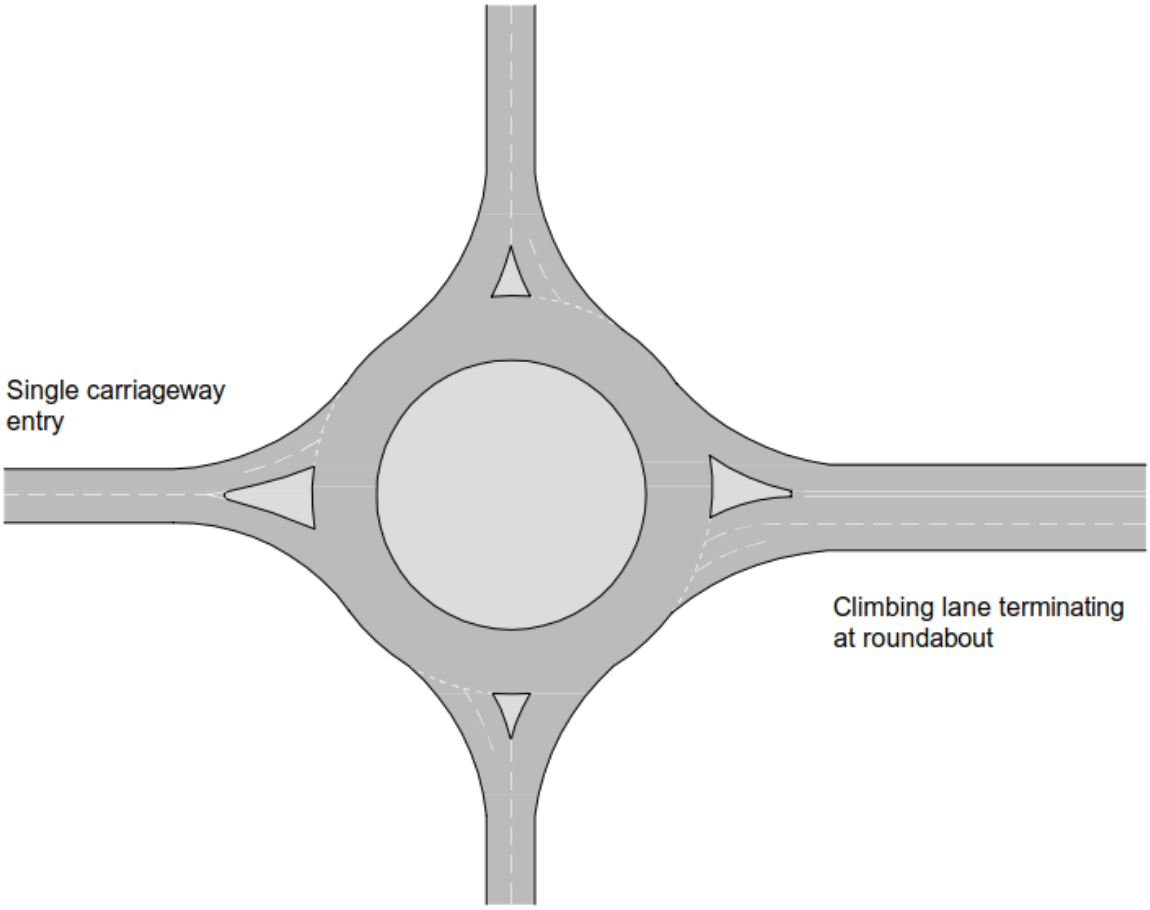

7.7.3 Where climbing lanes are provided on both sides of a hill, resulting in a four lane road and the length between tapers is equal to or greater 500 metres, the taper should be terminated as shown in Figure 7.5.

7.7.4 Where climbing lanes are provided on both sides of a hill, resulting in a four lane road and the length between tapers is less than 500 metres, the taper should be terminated as shown in Figure 7.7.4.

Downloaded from https://www.standardsforhighways.co.uk on 07-Aug-2023, CD 109 , published: Mar-2020

Downloaded from https://www.standardsforhighways.co.uk on 07-Aug-2023, CD 109 , published: Mar-2020

Figure 7.7.4 Crest curve at overlapping climbing lanes

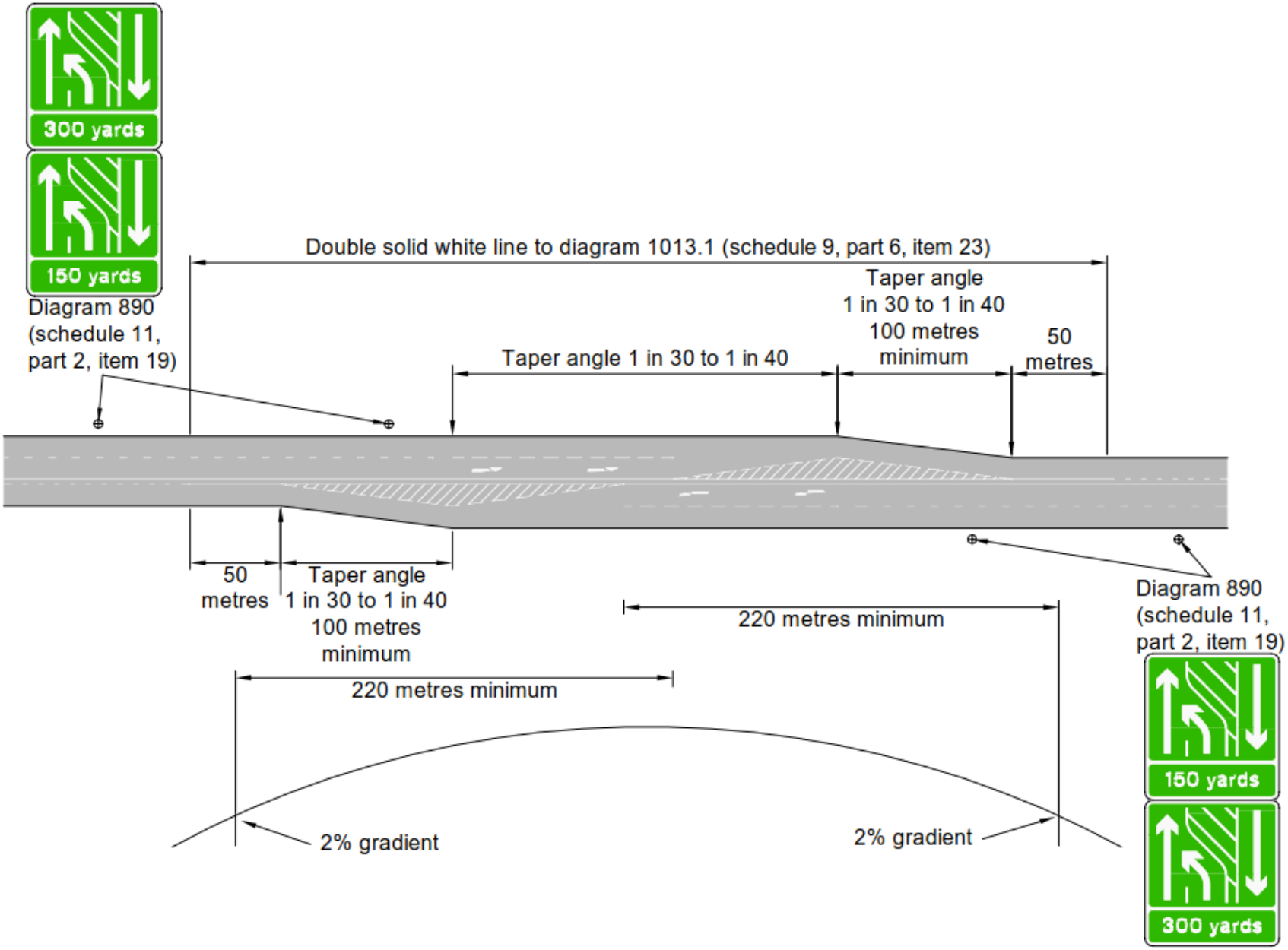

Sight distance requirements

7.8 Desirable minimum stopping sight distance appropriate for the design speed of the road (see Table 2.10) shall be provided throughout the length of the climbing lane (including tapers), except in constrained locations where a relaxation of 1 design step below desirable minimum stopping sight distance is permitted.

NOTE 1 Relaxations in stopping sight distance on climbing lanes can be used where difficult or constrained locations result in provision of desirable minimum stopping sight distance not being practicable.

NOTE 2 FOSD need not be provided over the length of a climbing lane.

7.8.1 For climbing lanes provided as part of a new scheme, crest curves should be designed to just above one step below the desirable minimum K value, with a double white line road marking as in Figure 7.7.4 to clearly establish the climbing lane priority.

NOTE If vehicles on the crest approaching the downhill section are provided with a high visibility crest curve, there can be a possibility of road users illegally crossing the continuous double white line road marking.

Road markings

7.9 On a climbing lane, a double white line road marking shall separate the two uphill lanes from the downhill lane with a continuous line for uphill traffic in all cases.

7.9.1 On a climbing lane a continuous line for downhill traffic should be provided except where the criteria for adopting a broken line is satisfied, as identified in TSM Chapter 5 [Ref 9.N].

NOTE 1 The use of a continuous road marking for downhill traffic, even when the visibility criteria for an intermittent road marking line are satisfied, can avoid frequent changes to road markings on long hills.

NOTE 2 On a climbing lane the two uphill lanes are separated by road markings in accordance with TSM Chapter 5 [Ref 9.N].

7.9.2 The road marking at the commencement of the climbing lane should be designed to encourage uphill drivers to keep to the nearside lane unless overtaking (see Figure 7.9.2).

Downloaded from https://www.standardsforhighways.co.uk on 07-Aug-2023, CD 109 , published: Mar-2020

Downloaded from https://www.standardsforhighways.co.uk on 07-Aug-2023, CD 109 , published: Mar-2020

Figure 7.9.2 Road markings at start / end of a climbing lane

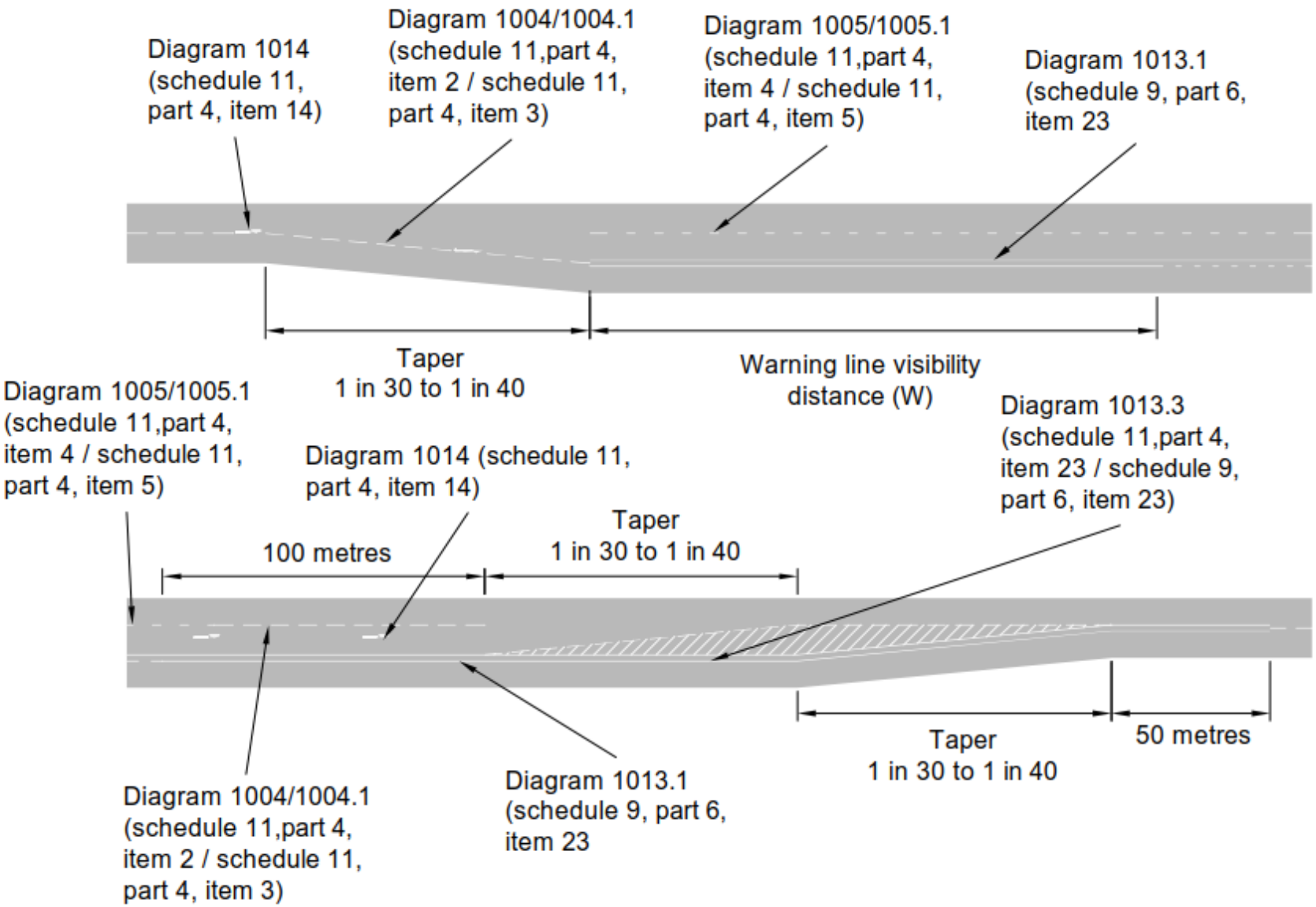

7.9.3 At the commencement of the climbing lane a length of double continuous line road marking should be provided for a length equal to the warning line visibility distance (W), according to the speed of uphill traffic (see Table 7.9.3).

Table 7.9.3 Length of double white line to be provided at the commencement of a climbing lane

85 percentile speed (kph)	Warning line visibility distance W (metres)
60	145
70	175
85	205
100	245
120	290

NOTE 1 The length of double continuous line at the commencement of the climbing lane can reduce the potential for conflict between uphill and downhill overtaking traffic.

NOTE 2 The length of double continuous line at the commencement of the climbing lane encourages a driver of an overtaking vehicle travelling downhill to return to the nearside lane reducing the potential for conflict with a vehicle travelling uphill.

7.9.4 The double white line at the commencement of the climbing lane may be extended to divide opposing traffic over the taper in order to discourage overtaking by downhill traffic.

7.9.5 The road marking layout that should be used at overlapping climbing lanes at hill crests is shown in Figures 7.7.4 and 7.9.5 .

Downloaded from https://www.standardsforhighways.co.uk on 07-Aug-2023, CD 109 , published: Mar-2020

Downloaded from https://www.standardsforhighways.co.uk on 07-Aug-2023, CD 109 , published: Mar-2020

Figure 7.9.5 Road marking at crests - climbing lanes terminate in advance

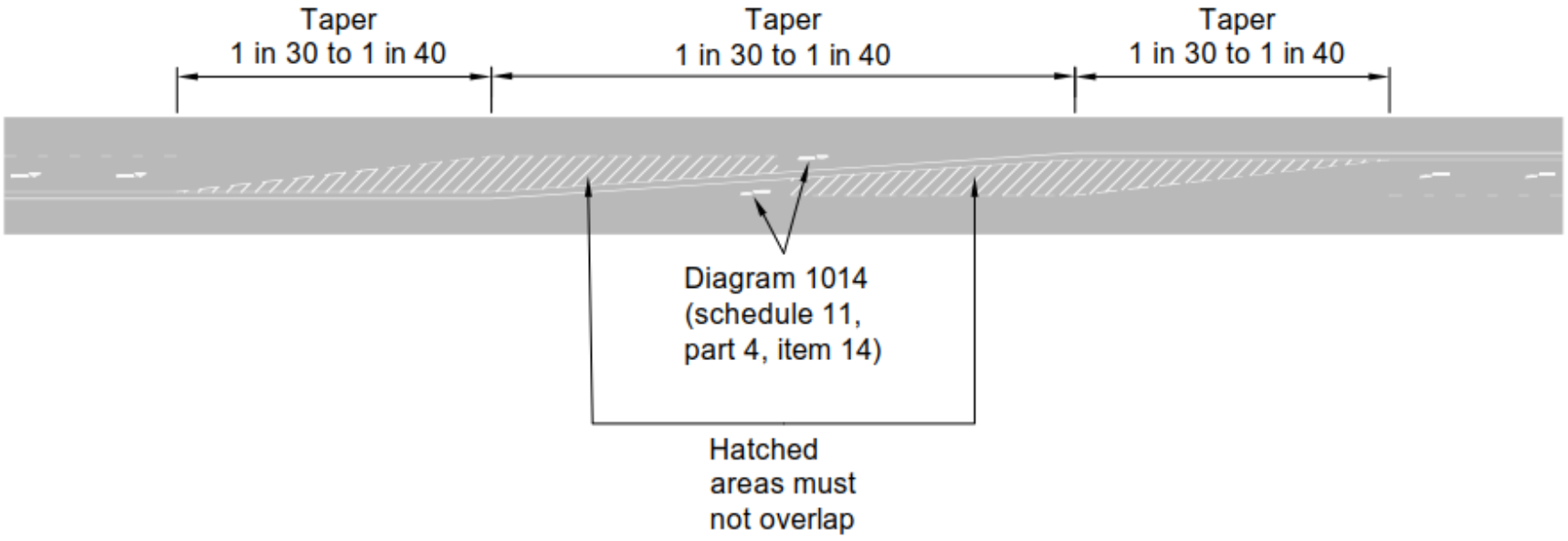

7.10 At overlapping climbing lanes, the hatched road markings at the end of opposing lanes must not overlap in accordance with TSRGD 2016 [Ref 6.N].

NOTE Ensuring the hatched areas of the overlapping climbing lanes do not overlap maintains the differentiation between the opposing lanes.

7.10.1 Figure 7.7.5 should be applied to situations where conventional exit taper layout would lead to a distance between ends of tapers of less than 500 metres.

7.10.2 Where opposing climbing lanes are provided on a crest and the climbing lane carriageway width is to be retained, Figure 7.9.5 shows the road marking layout that should be used over the crest.

7.10.3 The road marking layout that should be used at adjoining climbing lanes at sag curves is shown in Figure 7.4.4.

7.10.4 At sag curves the taper road marking between opposing traffic streams at adjoining climbing lanes should not be sharper than 1 in 50.

Downloaded from https://www.standardsforhighways.co.uk on 07-Aug-2023, CD 109 , published: Mar-2020

8. Climbing lanes - dual carriageways and motorways

Introduction

8.1 This section shall be used for the design, assessment and construction of climbing lanes on all motorway and dual carriageway trunk road schemes including improvements to the existing trunk road network that result in climbing lanes being introduced on motorways and dual carriageways.

8.1.1 A climbing lane may be provided by means of entry and exit tapers.

8.1.2 Where climbing lanes are provided by means of entry and exit tapers, the climbing lane should be a continuation of the nearside lane and the overtaking traffic merge into the slower moving traffic at the termination point.

NOTE On dual carriageways, climbing lanes can be justified on gradients of 3% and above over distances of at least 500 metres.

Layout

Lane widths

8.2 The climbing lane shall be 3.65 metres wide.

Layout at the start of climbing lane

8.3 The full width of the climbing lane shall be provided at a point C, 100 metres uphill from the 2% point of sag curve as shown in Figure 8.3.

Figure 8.3 Start of dual carriageway climbing lane

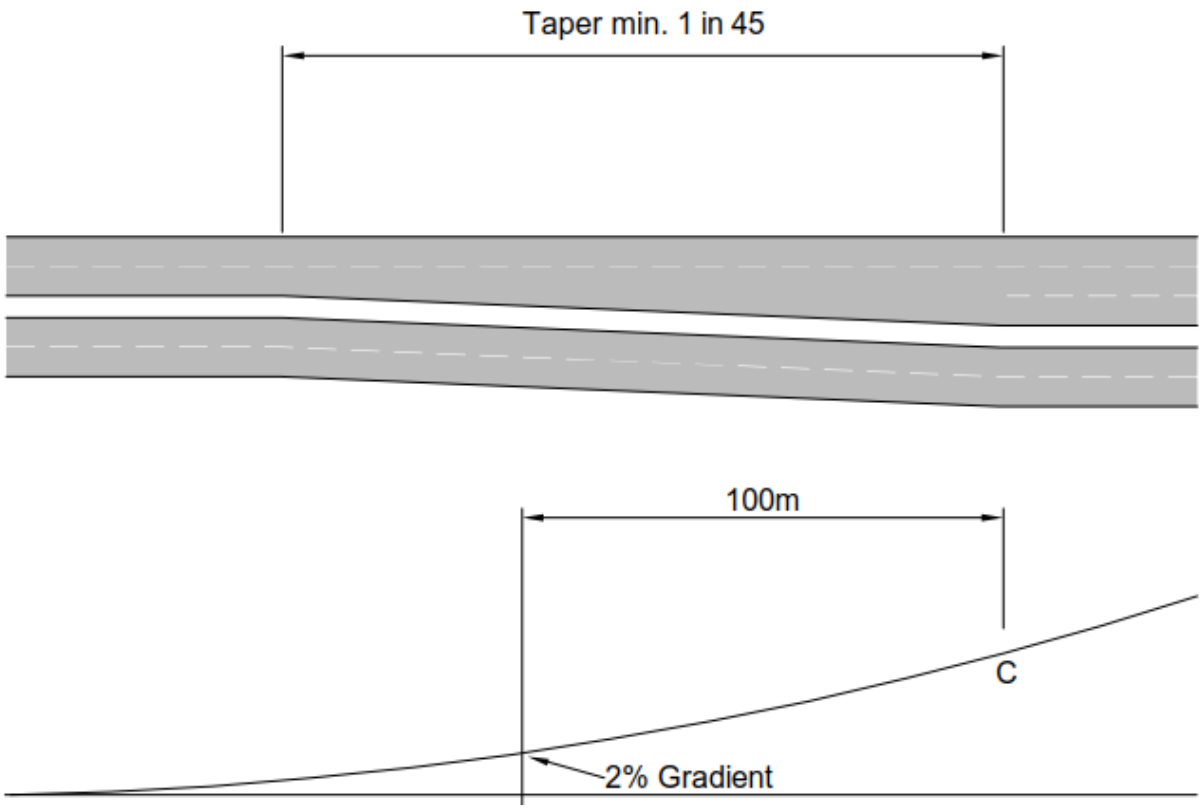

8.4 The full width of the climbing lane shall be preceded by a taper of at least 1 in 45, as shown in Figure 8.3, except for where it is provided at a roundabout exit on a dual carriageway.

8.4.1 The additional width should be developed by utilising the road curvature to provide a smooth transition.

Downloaded from https://www.standardsforhighways.co.uk on 07-Aug-2023, CD 109 , published: Mar-2020

8.5 Climbing lanes on dual carriageways shall not be provided directly at the exit of a roundabout.

8.5.1 Climbing lanes on dual carriageways located near the exit from a roundabout should allow for a distance of at least 100 metres before the entry taper to avoid conflicting traffic movements on exiting the roundabout.

8.6 The minimum entry taper shall be 1 in 30 where a climbing lane is provided on the exit from a roundabout as shown in Figure 8.6.

Figure 8.6 Start of climbing lane at roundabout

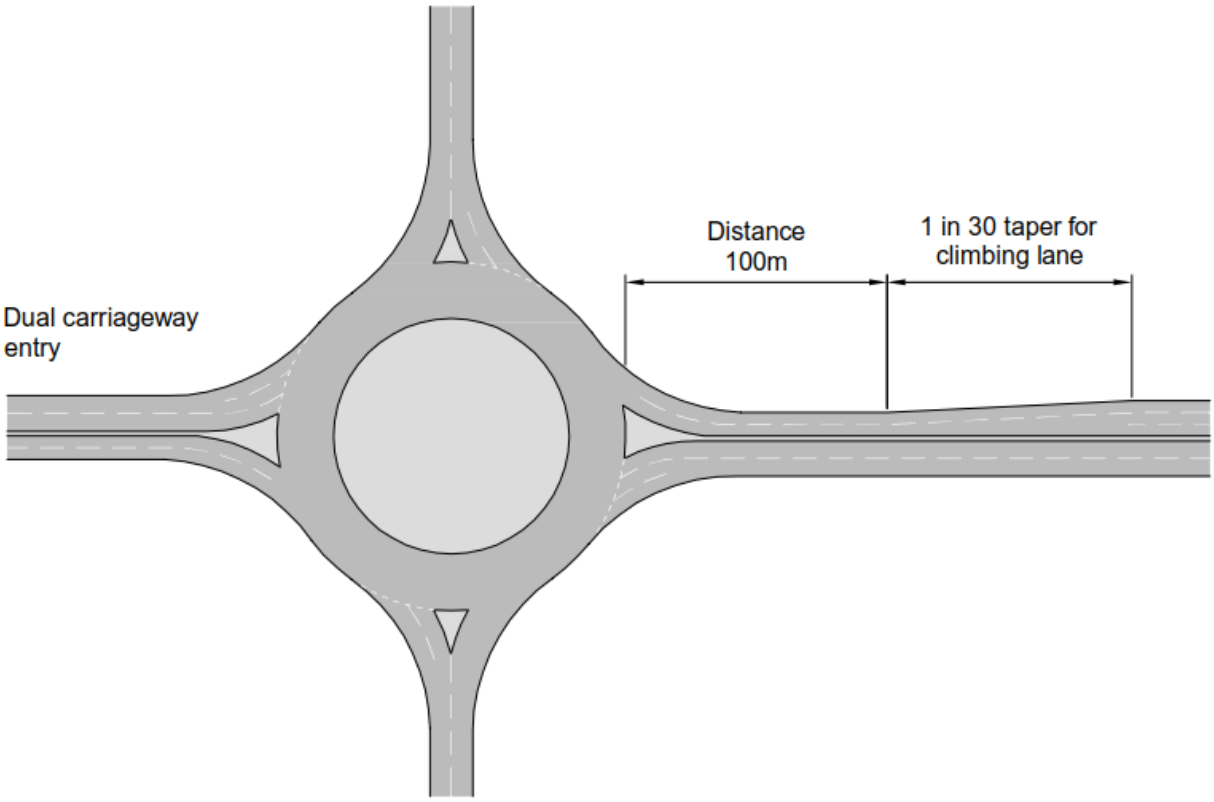

Layout at the end of climbing lane

8.7 The full width of the climbing lane shall be maintained up the gradient to point F, which is at least 220 metres beyond the 2% gradient point of the crest curve as shown in Figure 8.7N.

NOTE *The distance between the 2% gradient point and point F can be extended if a high proportion of HGVs or other slow moving vehicles currently cause problems or significantly reduce capacity.*

Downloaded from https://www.standardsforhighways.co.uk on 07-Aug-2023, CD 109 , published: Mar-2020

Downloaded from https://www.standardsforhighways.co.uk on 07-Aug-2023, CD 109 , published: Mar-2020

Figure 8.7N End of dual carriageway climbing lane

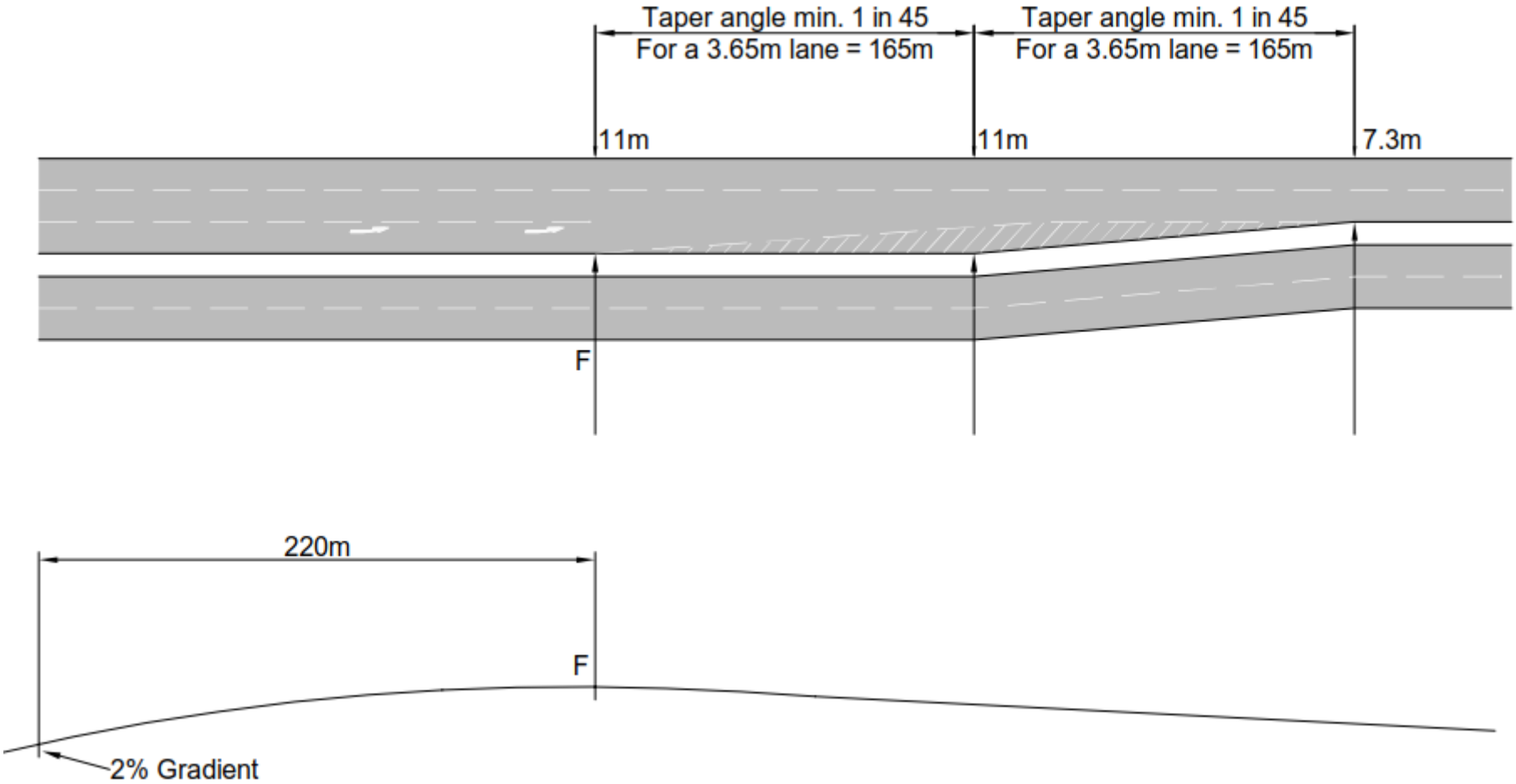

8.8 The taper at the end of the climbing lane shall be at least 1 in 45, as shown in Figure 8.7N.

8.8.1 Longer tapers than 1 in 45 should be provided wherever practicable.

8.8.2 A smooth transition should be used wherever possible.

8.8.3 The climbing lane may precede a roundabout so the overtaking lane becomes the right hand entry lane into the roundabout.

8.8.4 Where the climbing lane ends at a distance greater than 500 metres from the roundabout it should be terminated as shown in Figure 8.8.4.

Downloaded from https://www.standardsforhighways.co.uk on 07-Aug-2023, CD 109 , published: Mar-2020

Downloaded from https://www.standardsforhighways.co.uk on 07-Aug-2023, CD 109 , published: Mar-2020

Figure 8.8.4 Climbing lane end at roundabout entry - dual carriageway

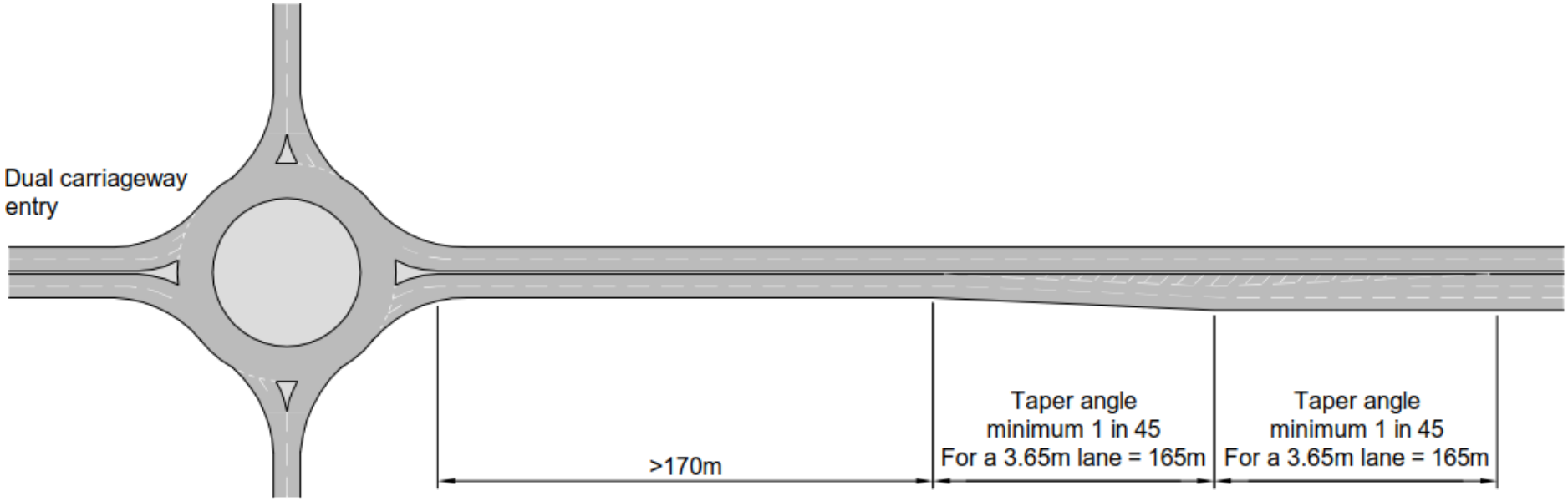

8.8.5 Where the climbing lane ends within 500 metres of the roundabout, the climbing lane should be extended to the roundabout and hatching at the end of the climbing lane omitted.

Downloaded from https://www.standardsforhighways.co.uk on 07-Aug-2023, CD 109 , published: Mar-2020

9. Single carriageway road overtaking sections

Overtaking sections

9.1 Overtaking sections on single carriageway roads shall comprise of any of the following:

1) level overtaking sections;
2) climbing lane sections;
3) single lane downhill sections at climbing lanes;
4) dual carriageway overtaking sections;
5) wide single 2+1 road overtaking lanes.

NOTE Dual carriageway overtaking sections are lengths of dual carriageway forming part of a route which is otherwise predominantly single carriageway. The dual sections can be taken into account when calculating the percentage of the route length that provides overtaking sections.

9.1.1 Clearly identifiable overtaking sections for both directions of travel should be provided throughout a single carriageway so vehicles can maintain the design speed in off-peak conditions therefore minimising the potential for driver frustration.

Overtaking value

9.2 The minimum overtaking value for rural S2 roads shall be 30%.

NOTE The overtaking value is the length of overtaking sections expressed as a percentage of the route.

9.3 The minimum overtaking value for WS2 roads shall be 30%.

9.3.1 The minimum overtaking value for WS2 roads should be 40%.

NOTE Overtaking values at or above the recommended value of 40% are appropriate for WS2 roads with single lane dualling at junctions with minor roads and at-grade roundabouts at junctions with major roads.

Lengths of road over 2km

9.4 The calculation of overtaking value shall apply to new single carriageway roads exceeding 2km in length.

9.5 The total length of overtaking sections for each direction shall be summed and divided by the total length of the new road to obtain the overtaking value in each direction, expressed as a percentage.

9.5.1 Overtaking sections should be distributed along a length of road such that no individual non-overtaking section exceeds 3km in length.

Lengths of road less than 2 km

9.6 New single carriageway roads less than 2km in length shall be integrated with the contiguous sections of existing road when calculating the overtaking value.

9.6.1 Where contiguous sections afford little or no overtaking opportunities, the overtaking value should only be provided for the length of the new single carriageway road.

NOTE 1 Where contiguous existing sections of road provide good overtaking opportunities, it can relieve the necessity to provide the required overtaking value for the proposed section of new road.

NOTE 2 The minimum overtaking values do not apply to isolated improvements to existing roads such as the treatment of bends, junctions, and narrow sections of road.

Level overtaking sections

9.7 Level overtaking sections on 2 lane single carriageway roads shall consist of:

Downloaded from https://www.standardsforhighways.co.uk on 07-Aug-2023, CD 109 , published: Mar-2020

1) straight or nearly straight horizontal alignment with a minimum radius of curvature as shown in Table 9.7 (also see Figure 9.23N2), and/or;
2) right hand curves which provide at least FOSD at their commencement (see Figure 9.23N2).

Table 9.7 Minimum radius of straight or nearly straight sections at level overtaking sections

Design speed (kph)	100	85	70	60	50
Minimum radius of straight or nearly straight sections (metres)	8160	5760	4080	2880	2040

NOTE *Level overtaking sections are lengths of 2 lane single carriageway that provide clear opportunities for overtaking. Lengths of road that form level overtaking sections have central road markings that can be legally crossed.*

Commencement of level overtaking sections

9.8 Level overtaking sections shall be measured from the point on a straight, nearly straight or right hand curve where FOSD is achieved either within or outside of the highway / road boundary.

9.9 Where FOSD is measured outside of the highway / road boundary this visibility shall be permanently maintained.

Termination of level overtaking sections

9.10 Level overtaking sections shall terminate at one of the following:

1) a point FOSD/4 prior to the tangent point (or centre of transition) of a left hand curve (see Figure 9.10); or
2) the point on a right hand curve where sight distance has reduced to FOSD/2 (see Figure 9.10); or
3) a point FOSD/4 prior to an obstruction to overtaking (see the section on Obstructions to overtaking below).

Figure 9.10 Commencement and termination of level overtaking sections

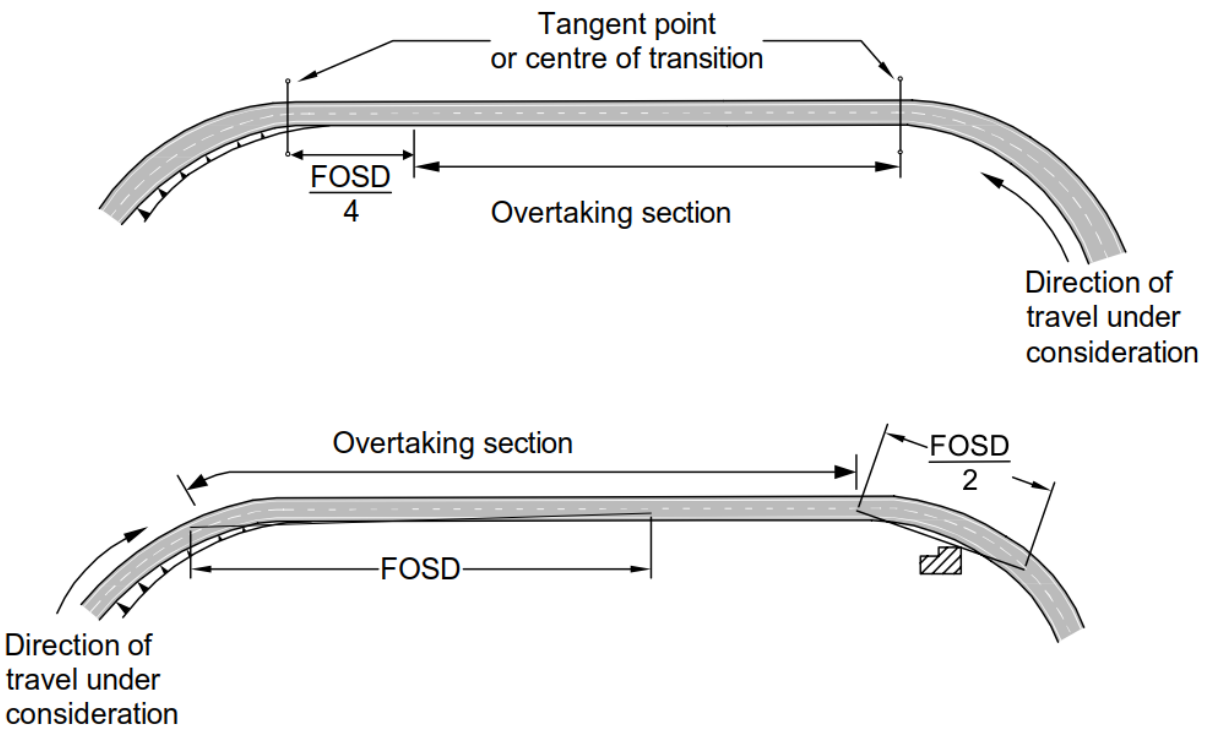

Downloaded from https://www.standardsforhighways.co.uk on 07-Aug-2023, CD 109 , published: Mar-2020

NOTE *Figure 9.10 shows diagrammatically the commencement and termination points of level overtaking sections.*

Climbing lane sections

Commencement of climbing lane overtaking sections

9.11 Climbing lane overtaking sections shall be measured from the mid-point of the commencing taper at the start of the two uphill lanes, see Figure 9.11.

Figure 9.11 Commencement and termintation of climbing lane overtaking sections

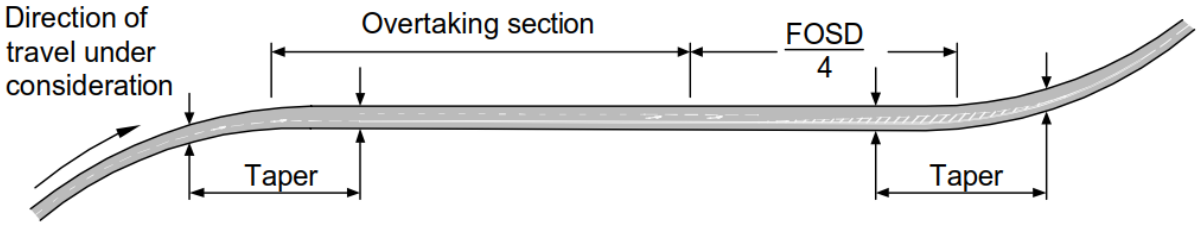

Termination of climbing lane overtaking sections

9.12 The termination point of a climbing lane overtaking section shall be measured to a point FOSD/4 prior to the mid-point of the finishing taper, see Figure 9.11.

9.12.1 If the section of road following a climbing lane overtaking section is also an overtaking section, it should be treated as being contiguous with the climbing lane section.

Single lane downhill sections at climbing lanes

9.13 Single lane downhill overtaking sections at climbing lanes shall only consist of straight or nearly straight sections (see Table 9.7 and Figure 9.23N2), or right hand curves with minimum radii as shown in Table 9.13.

Table 9.13 Minimum right hand curve radii for single lane downhill sections at existing climbing lanes

Design speed (kph)	100	85	70	60	50
Minimum right hand curve radius of single lane downhill sections (metres)	2880	2040	1440	1020	720

NOTE 1 *Single lane downhill overtaking sections are sections of a single downhill lane constrained by a double white line system, with a solid line provided adjacent to the two lane side and a broken line provided adjacent to the single lane, where the combination of visibility and horizontal curvature provide clear opportunities for overtaking when the opposing traffic permits.*

NOTE 2 *Climbing lane road markings confine downhill traffic to a single lane, unless there is ample forward visibility unobstructed by slow-moving vehicles in the climbing lane. Where the length of a climbing lane exceeds about 3km, it can be beneficial that some sections are provided with a straight or large radius right hand curvature in order to provide an overtaking section for downhill traffic.*

9.14 Verges shall not be widened on single lane downhill lane sections to give FOSD.

NOTE *On single downhill lane sections the sight distance naturally occurring within the normal highway / road boundaries along straights, near straights and at the radii shown in Table 9.8 for right hand curves is sufficient for downhill overtaking.*

9.14.1 Single lane downhill sections should only be used as overtaking sections on straight grades or sag curves where FOSD is achieved.

Downloaded from https://www.standardsforhighways.co.uk on 07-Aug-2023, CD 109 , published: Mar-2020

Commencement of single lane downhill overtaking sections at climbing lanes

9.15 Single lane downhill overtaking sections shall be measured from the point where the right hand curve radius achieves or exceeds the requisite value from Table 9.13, see Figure 9.15.

Downloaded from https://www.standardsforhighways.co.uk on 07-Aug-2023, CD 109 , published: Mar-2020

Downloaded from https://www.standardsforhighways.co.uk on 07-Aug-2023, CD 109 , published: Mar-2020

Figure 9.15 Commencement and termintation of single lane downhill climbing lane overtaking sections

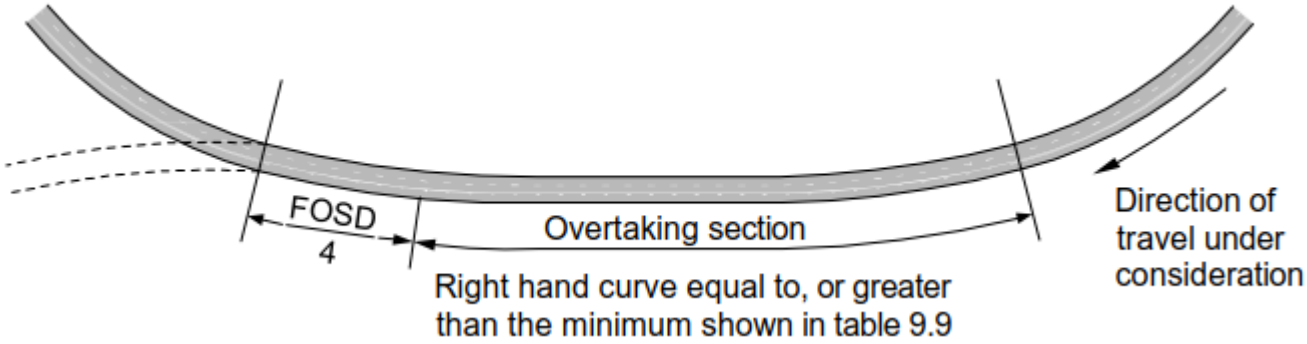

Termination of single lane downhill overtaking sections at climbing lanes

9.16 The termination point of a single lane downhill overtaking section shall be measured to a point FOSD/4 prior to the end of the straight or nearly straight section or end of radius equal to or greater than shown in Table 9.13, see Figure 9.15.

Dual carriageway overtaking sections

Commencement of dual carriageway overtaking sections

9.17 Dual carriageway overtaking sections shall be measured from the mid-point of the commencing taper where the carriageway widens from 1 to 2 lanes.

Termination of dual carriageway overtaking sections

9.18 The termination point of dual carriageway overtaking sections shall be measured to a point FOSD/4 prior to the mid-point of the finishing taper where the carriageway reduces from 2 lanes to 1 lane.

NOTE Details of the appropriate road marking layout of the finishing taper where the carriageway reduces from 2 lanes to 1 lane are shown in TSM Chapter 5 [Ref 9.N].

Wide single 2+1 roads (WS2+1)

Commencement of WS2+1 overtaking sections

9.19 WS2+1 overtaking sections shall be measured from a point where the full width overtaking lane commences, see Figures 6.11.2 and 6.11.3.

Termination of WS2+1 overtaking sections

9.20 The termination point of WS2+1 overtaking sections shall be measured to a point FOSD/4 prior to the mid-point of the 130 metres long taper immediately following the full width overtaking lane see Figure 6.15.

Obstructions to overtaking

9.21 On 2 lane single carriageway roads the termination point for overtaking sections on the approach to obstructions shall be a distance of FOSD/4 prior to the nose of the ghost island or physical island, or the roundabout give way line, as shown in Figure 9.21.

Downloaded from https://www.standardsforhighways.co.uk on 07-Aug-2023, CD 109 , published: Mar-2020

Figure 9.21 Termination of overtaking sections at obstructions

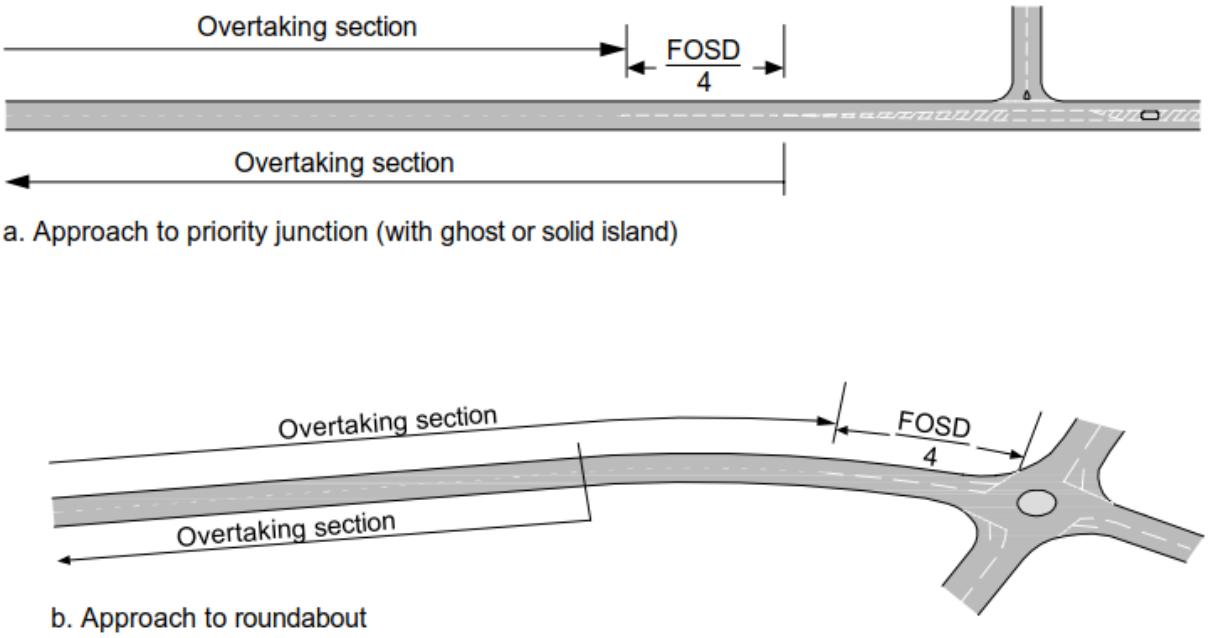

NOTE 1 *Priority junctions incorporating ghost islands or single lane dualling and roundabouts are defined as obstructions to overtaking when they are located within an, otherwise, overtaking section.*

NOTE 2 *Simple priority junctions (with no central mainline treatment) are not considered obstructions to overtaking. Direct accesses are not permitted in overtaking sections (refer to CD 123 [Ref 2.N] for details).*

9.22 Following an obstruction to overtaking, an overtaking section shall commence on a straight or nearly straight horizontal alignment with radius of curvature greater than shown in Table 9.7 (also see Figure 9.23N2) providing at least FOSD, or right hand curves which provide at least FOSD at their commencement (see Figure 9.23N2).

9.22.1 When an overtaking section follows a priority junction, the measurement of the overtaking section should commence from the end of the ghost island nose shown in Figure 9.21.

Horizontal curve design

9.23 Level overtaking sections on single carriageway 2 lane roads shall be provided as straight or nearly straight sections (see section A in Figure 9.23N2 and Table 9.7), thus providing an overtaking section for both directions of travel ($V^2/R < 1.25$).

NOTE 1 *Where straight sections or nearly straight sections are not possible, lower radii results in right hand curve overtaking sections:*

1) on level sections following the achievement of FOSD; and

2) on existing climbing lane single lane downhill sections.

NOTE 2 *Figure 9.23N2 shows a curve selection chart for horizontal curves, which illustrates the bands of radii (relative to design speed) and their applicability in the design of 2 lane single carriageway roads.*

Downloaded from https://www.standardsforhighways.co.uk on 07-Aug-2023, CD 109 , published: Mar-2020

Figure 9.23N2 Horizontal curve design

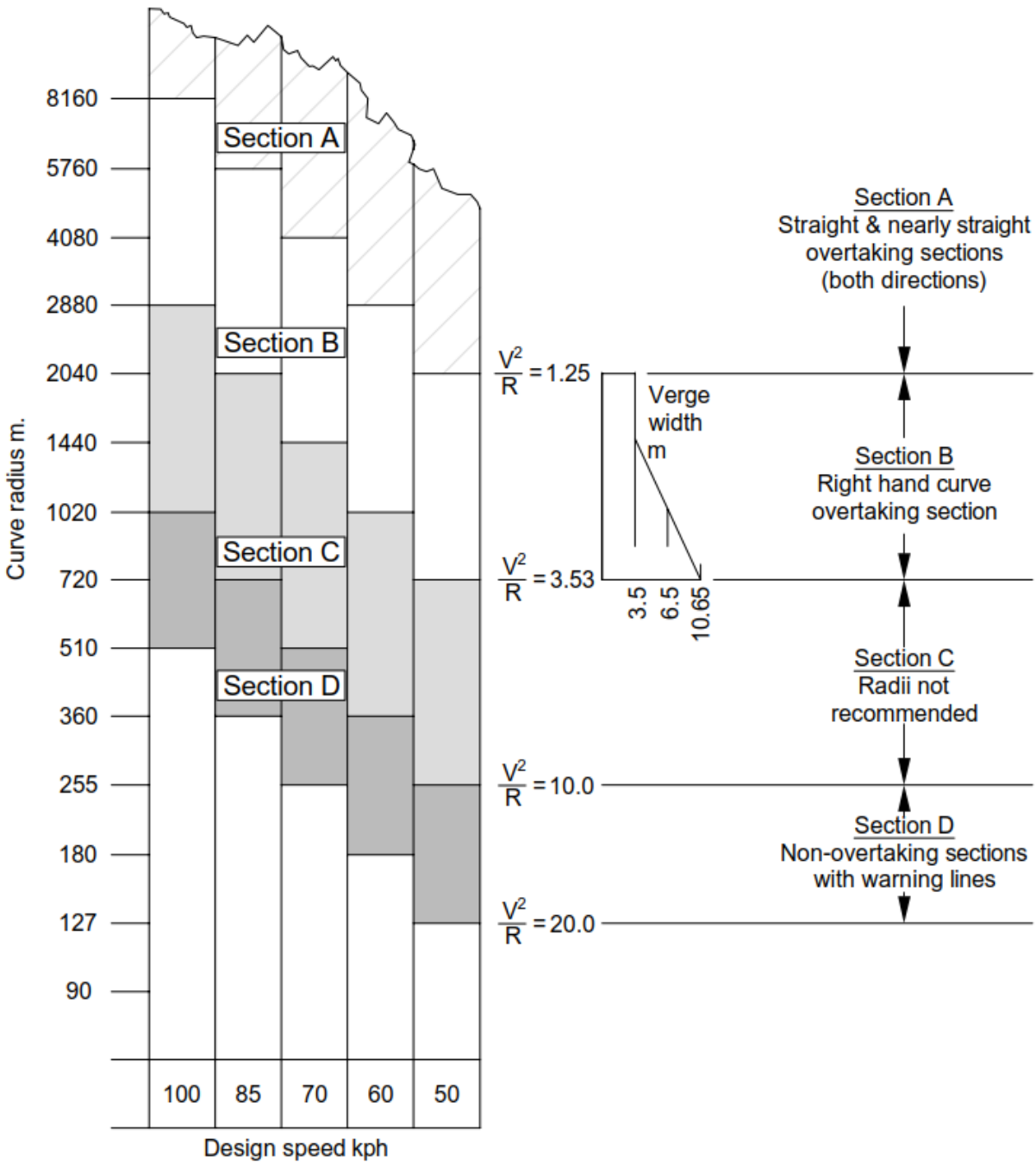

9.24 The minimum radii for overtaking sections on single carriageway 2 lane roads shall be the lower limit of section B in Figure 9.24N2 (V^2/R = 3.53) and values shown in Table 9.13 for right hand curves.

NOTE *At the lower limit of section B, visibility for left hand curve traffic deteriorates significantly, and a verge width of 10.65 metres is needed to maintain FOSD within the highway / road for right hand curve traffic.*

9.24.1 The radii in section C, shown in Figure 9.23N2 (V^2/R = 3.53 to V^2/R =10), should not be used in single carriageway design.

NOTE *The use of mid to large radius curves inhibits the design of clear overtaking sections for vehicles travelling in the left hand curve direction, and reduces the length of overtaking straight that could otherwise be achieved.*

Downloaded from https://www.standardsforhighways.co.uk on 07-Aug-2023, CD 109 , published: Mar-2020

9.24.2 Non-overtaking sections should be designed using the radii shown in section D (V^2/R = 10 to V^2/R = 20) in Figure 9.23N2.

9.24.3 Radii of non-overtaking sections should be chosen around the middle of section D (V^2/R = 14) in Figure 9.23N2.

NOTE Radii around the middle of section D as shown in Figure 9.23N2 strikes a balance between providing clear non-overtaking sections and avoiding steep superelevation.

Vertical curve design

9.25 For measurement of overtaking sections, a single carriageway 2 lane road with a crest curve with less than FOSD shown in Table 2.10 shall be a non-overtaking section.

9.25.1 The overtaking section approaching the non-overtaking crest should terminate at the point at which sight distance has reduced to FOSD/2, as shown in Figure 9.25.1.

Figure 9.25.1 Non-overtaking crest

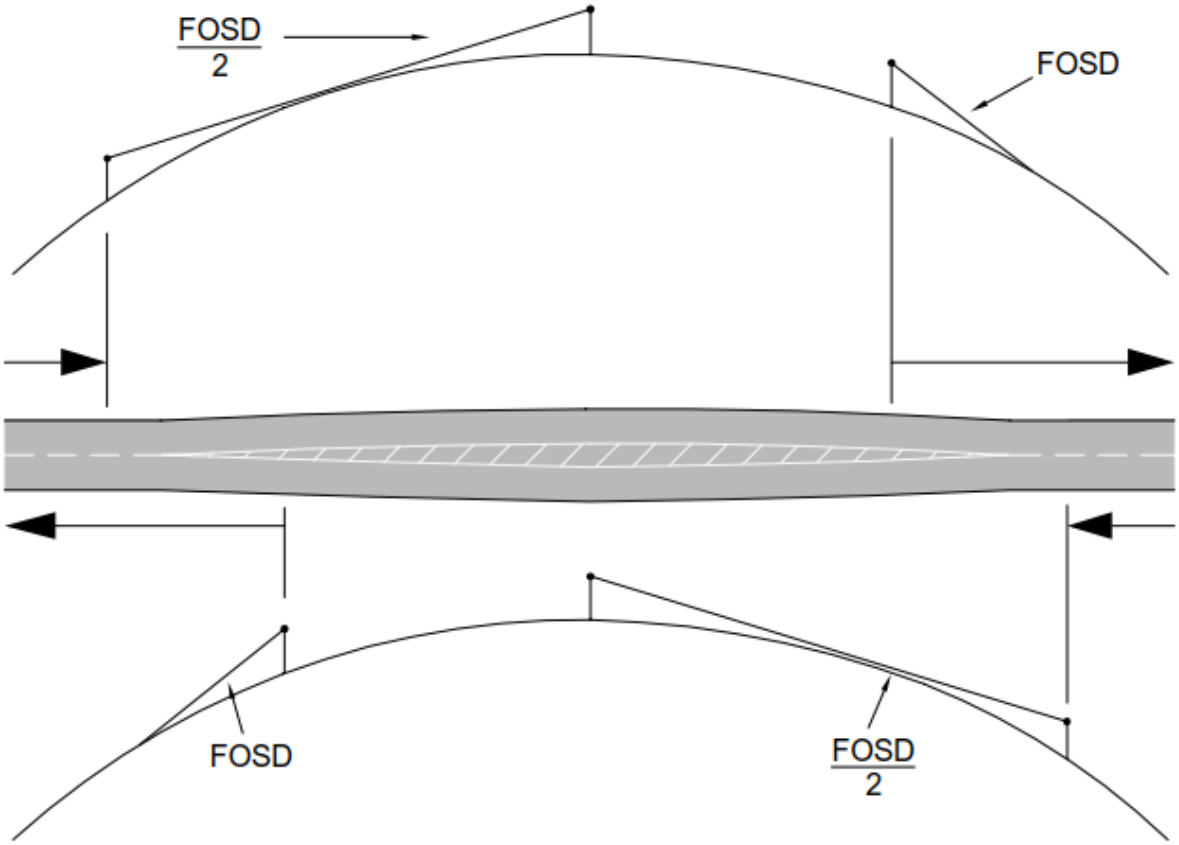

9.25.2 The use of desirable minimum crest K values should be avoided for 2 lane single carriageway road design.

NOTE 1 The use of desirable minimum crest K values results in a continuous sight distance only slightly above FOSD/2, and therefore theoretically, the overtaking section is continuous over the crest (and warning markings are not strictly justified).

NOTE 2 Unless a vertical curve can have a large enough K value to provide FOSD (therefore forming an overtaking section) the resulting alignment will provide inadequate visibility for safe overtaking. A K value of one design speed step below desirable minimum results in a clear non-overtaking section and further improvement to K value is counter productive as it increases the length of uncertain crest visibility while not achieving a safe overtaking visibility.

Downloaded from https://www.standardsforhighways.co.uk on 07-Aug-2023, CD 109 , published: Mar-2020

Changes in carriageway type

9.26 If lengths of dual carriageway within a generally single carriageway road or vice-versa are provided they shall be at least 2km in length.

Downloaded from https://www.standardsforhighways.co.uk on 07-Aug-2023, CD 109 , published: Mar-2020

10. Normative references

The following documents, in whole or in part, are normative references for this document and are indispensable for its application. For dated references, only the edition cited applies. For undated references, the latest edition of the referenced document (including any amendments) applies.

Ref 1.N	Highways England. CD 127, 'Cross-sections and headrooms'
Ref 2.N	Highways England. CD 123, 'Geometric design of at-grade priority and signal-controlled junctions'
Ref 3.N	Highways England. CD 122, 'Geometric design of grade separated junctions'
Ref 4.N	Highways England. CD 116, 'Geometric design of roundabouts'
Ref 5.N	Highways England. GG 101, 'Introduction to the Design Manual for Roads and Bridges'
Ref 6.N	The Stationery Office. TSRGD 2016, 'The Traffic Signs Regulations and General Directions 2016'
Ref 7.N	The Stationery Office. TSM Chapter 3, 'Traffic Signs Manual Chapter 3 - Regulatory Signs'
Ref 8.N	The Stationery Office. TSM Chapter 4, 'Traffic Signs Manual Chapter 4 - Warning Signs'
Ref 9.N	The Stationery Office. TSM Chapter 5, 'Traffic Signs Manual Chapter 5 - Road Markings'

Downloaded from https://www.standardsforhighways.co.uk on 07-Aug-2023, CD 109 , published: Mar-2020

11. Informative references

The following documents are informative references for this document and provide supporting information.

Ref 1.I	Highways England. CG 501, 'Design of highway drainage systems'

Downloaded from https://www.standardsforhighways.co.uk on 07-Aug-2023, CD 109 , published: Mar-2020

Appendix A. Coordinated link design

The tables below give guidance on layout features for the various rural road types that can help to provide coordinated link design. The contents of the tables are not exhaustive and not intended to supersede requirements and advice included in the wider Design Manual for Roads and Bridges requirements and advice documents, and the requirements and advice in the appropriate highway design requirements and advice documents take precedence.

Downloaded from https://www.standardsforhighways.co.uk on 07-Aug-2023, CD 109 , published: Mar-2020

Downloaded from https://www.standardsforhighways.co.uk on 07-Aug-2023, CD 109 , published: Mar-2020

Table A.1 Single carriageway roads

Type of road (see CD 127 [Ref 1.N])	Sub-category	Edge treatment	Direct access treatment (see CD 123 [Ref 2.N] for a definition of direct access)	Junction treatment at minor road intersection (see CD 123 [Ref 2.N] and CD 116 [Ref 4.N])	Junction treatment at major road intersection (see CD 123 [Ref 2.N], CD 122 [Ref 3.N] and CD 116 [Ref 4.N])	Previous category reference used in TD 9 Table 4 (see note 1)
2 lane single carriageway (S2) - 7.3 metre carriageway	a	Kerbs and raised verges. Pedestrian footways and cycle tracks. Nearside - hard strip. Offside - hard strip.	Minimise number of direct accesses to avoid standing vehicles and concentrate turning movements.	Simple priority junctions. Ghost island junctions.	Ghost island junctions.	1
	b	No pedestrian footways or cycle tracks. Nearside - hard strip. Offside - hard strip.	Minimise number of direct accesses to avoid standing vehicles and concentrate turning movements.	Simple priority junctions. Ghost island junctions.	Ghost island junctions. Single lane dualling. Roundabouts. Traffic signals.	2
	c	No pedestrian footways or cycle tracks. Nearside - hard strip. Offside - hard strip.	Minimise number of direct accesses to avoid standing vehicles and concentrate turning movements. Clearway (see TSM Chapter 3 [Ref 7.N])	Left-in / left-out priority junctions. Ghost island junctions.	Single lane dualling. Roundabouts. Traffic signals.	3A

Downloaded from https://www.standardsforhighways.co.uk on 07-Aug-2023, CD 109 , published: Mar-2020

Table A.1 Single carriageway roads (continued)

Type of road (see CD 127 [Ref 1.N])	**Sub-category**	**Edge treatment**	**Direct access treatment (see CD 123 [Ref 2.N] for a definition of direct access)**	**Junction treatment at minor road intersection (see CD 123 [Ref 2.N] and CD 116 [Ref 4.N])**	**Junction treatment at major road intersection (see CD 123 [Ref 2.N], CD 122 [Ref 3.N] and CD 116 [Ref 4.N])**	**Previous category reference used in TD 9 Table 4 (see note 1)**
Wide single 2 lane carriageway (WS2) - 10 metre carriageway	a	Pedestrian footways and cycle tracks. Nearside - hard strip. Offside - hard strip.	Minimise number of direct accesses to avoid standing vehicles and concentrate turning movements. Clearway (see TSM Chapter 3 [Ref 7.N])	Left-in / left-out priority junctions. Ghost island junctions. Single lane dualling.	Single lane dualling. Roundabouts.	3B
	b	No pedestrian footways or cycle tracks. Nearside - hard strip. Offside - hard strip.	Minimise number of direct accesses to avoid standing vehicles and concentrate turning movements.Clearway (see TSM Chapter 3 [Ref 7.N])	Left-in / left-out priority junctions. Single lane dualling. Roundabouts. Some side roads stopped up.	Roundabouts.	4
Wide single 2+1 roads (WS2+1) - 11.5 metre carriageway	a	Nearside - hard strip. Offside - hard strip.	Not permitted.	Ghost island junctions.	Left-in / left-out compact grade separated junctions. Ghost island junctions. Roundabouts.	Not previously used

Downloaded from https://www.standardsforhighways.co.uk on 07-Aug-2023, CD 109 , published: Mar-2020

Table A.2 Dual carriageway roads

Type of road (see CD 127 [Ref 1.N])	Sub-category	Edge treatment	Direct access treatment (see CD 123 [Ref 2.N] for a definition of direct access)	Junction treatment at minor road intersection (see CD 123 [Ref 2.N] and CD 116 [Ref 4.N])	Junction treatment at major road intersection (see CD 123 [Ref 2.N], CD 122 [Ref 3.N] and CD 116 [Ref 4.N])	Previous category reference used in TD 9 Table 4 (see note 1)
Dual 2 lane All-purpose roads (D 2AP) - 7.3 metre carriageway	a	Kerbs and raised verges. Pedestrian footways and cycle tracks. Nearside - hard strip. Offside - hard strip.	Minimise number of direct accesses to avoid standing vehicles and concentrate turning movements. Clearway (see TSM Chapter 3 [Ref 7.N])	Left-in / left-out priority junctions. Priority junctions. No other gaps in the central reserve.	Traffic signals. At-grade roundabouts. Compact grade separation. Grade separation if economically justified.	5
	b	No pedestrian footways or cycle tracks. Nearside - hard strip. Offside - hard strip.	Minimise number of direct accesses to avoid standing vehicles and concentrate turning movements. Clearway (see TSM Chapter 3 [Ref 7.N])	No minor junctions at-grade. No gaps in the central reserve.	At-grade roundabouts. Full grade separation.	6
	c	No pedestrian footways or cycle tracks. Nearside - hard strip. Offside - hard strip.	No access except isolated existing access with left turns only. Clearway (see TSM Chapter 3 [Ref 7.N])	No minor junctions at-grade. No gaps in the central reserve.	Full grade separation.	7A
Dual 3 lane All-purpose roads (D 3AP) - 11 metre carriageway	a	Nearside - hard strip. Offside - hard strip.	Not permitted. Clearway (see TSM Chapter 3 [Ref 7.N])	No minor junctions at-grade. No gaps in the central reserve.	Full grade separation.	7C / 8B (See note 2)

Downloaded from https://www.standardsforhighways.co.uk on 07-Aug-2023, CD 109 , published: Mar-2020

Table A.2 Dual carriageway roads (continued)

Type of road (see CD 127 [Ref 1.N])	Sub-category	Edge treatment	Direct access treatment (see CD 123 [Ref 2.N] for a definition of direct access)	Junction treatment at minor road intersection (see CD 123 [Ref 2.N] and CD 116 [Ref 4.N])	Junction treatment at major road intersection (see CD 123 [Ref 2.N], CD 122 [Ref 3.N] and CD 116 [Ref 4.N])	Previous category reference used in TD 9 Table 4 (see note 1)
Dual 2 lane motorway (D2M) - 7.3 metre carriageway	a	Nearside - hard shoulder. Offside - hard strip.	Not permitted - Motorway Regulations.	Not permitted - Motorway Regulations.	Full grade separation - motorway standard.	7B / 8A (See note 3)
Dual 3 lane motorway (D3M) - 11 metre carriageway	a	Nearside - hard shoulder. Offside - hard strip.	Not permitted - Motorway Regulations.	Not permitted - Motorway Regulations.	Full grade separation - motorway standard.	9
Dual 4 lane motorway (D4M) - 14.7 metre carriageway	a	Nearside - hard shoulder. Offside - hard strip.	Not permitted - Motorway Regulations.	Not permitted - Motorway Regulations.	Full grade separation - motorway standard.	10

Note 1: Reference is made to the categorisation system used in TD 9 to allow comparison with schemes that are being progressed to the previous standard or have been completed to the previous standard. It is suggested that for developing schemes the categorisation system introduced in the figures above, based on road type and sub-category, is referenced (for example D2APb).

Note 2: The previous categories 7C and 8B in TD 9 essentially duplicated each other and these have been rationalised in this document.

Note 3: The previous categories 7B and 8A in TD essentially duplicated each other and these have been rationalised in this document.

Downloaded from https://www.standardsforhighways.co.uk on 07-Aug-2023, CD 109 , published: Mar-2020

Downloaded from https://www.standardsforhighways.co.uk on 07-Aug-2023, CD 109 , published: Mar-2020

© Crown copyright 2020.
You may re-use this information (not including logos) free of charge in any format or medium, under the terms of the Open Government Licence. To view this licence:
visit **www.nationalarchives.gov.uk/doc/open-government-licence/**,
write to the **Information Policy Team, The National Archives, Kew, London TW9 4DU**,
or email **psi@nationalarchives.gsi.gov.uk**.

Road Layout
Design

CD 109
England National Application Annex to CD 109
Highway link design

(formerly IAN 149/17, IAN 161/15 and IAN 198/17)

Revision 1

Summary
This National Application Annex sets out the Highways England specific requirements for highway link design on existing roads

Feedback and Enquiries
Users of this document are encouraged to raise any enquiries and/or provide feedback on the content and usage of this document to the dedicated Highways England team. The email address for all enquiries and feedback is: Standards_Enquiries@highwaysengland.co.uk

This is a controlled document.

Downloaded from https://www.standardsforhighways.co.uk on 07-Aug-2023, CD 109 , published: Mar-2020

Contents

Release notes **2**

Foreword **3**
Publishing information . . . 3
Contractual and legal considerations . . . 3

Introduction **4**
Background . . . 4
Assumptions made in the preparation of this document . . . 4

Abbreviations **5**

Terms and definitions **6**

E/1. Modifying existing motorways **7**
Scope . . . 7
Geometric parameters . . . 7
Design speed (CD 109 clauses 2.1 and 2.4) . . . 7
Combinations (CD 109 clause 2.12) . . . 7
Immediate approaches to junctions (CD 109 clause 2.14) . . . 7
Stopping sight distance (CD 109 clause 3.7) . . . 7
Road camber and drainage (CD 109 clauses 4.1 to 4.4) . . . 7
Transitions (CD 109 clause 4.14) . . . 8

E/2. Modifying existing all-purpose dual carriageways **9**
Scope . . . 9
Geometric parameters . . . 9
Combinations (CD 109 clause 2.12) . . . 9

E/3. Smart motorways **10**
Scope . . . 10
Geometric parameters . . . 10
Design speed (CD 109 clauses 2.1 and 2.4) . . . 10
Combinations (CD 109 clauses 2.12 and 2.13) . . . 10
Immediate approaches to junctions (CD 109 clause 2.14) . . . 10
Stopping sight distance (CD 109 clauses 3.7) . . . 10
Road camber and drainage (CD 109 clauses 4.1 to 4.4) . . . 10

E/4. Normative references **12**

Downloaded from https://www.standardsforhighways.co.uk on 07-Aug-2023, CD 109 , published: Mar-2020

Release notes

Version	Date	Details of amendments
1	Mar 2020	Revision 1 (March 2020) Update to references only. Revision 0 (November 2019) Highways England National Application Annex to CD 109.

Downloaded from https://www.standardsforhighways.co.uk on 07-Aug-2023, CD 109 , published: Mar-2020

Foreword

Publishing information

This document is published by Highways England.

This document supersedes those parts of IAN 149/17, IAN 161/15 and IAN 198/17 relating to the highway link design which are withdrawn.

Contractual and legal considerations

This document forms part of the works specification. It does not purport to include all the necessary provisions of a contract. Users are responsible for applying all appropriate documents applicable to their contract.

Downloaded from https://www.standardsforhighways.co.uk on 07-Aug-2023, CD 109 , published: Mar-2020

Introduction

Background

This National Application Annex (NAA) gives Highways England specific requirements and additional relaxations relating to highway link design for:

1) modifying existing motorways where motorway regulations apply (herein referred to as 'existing motorways');
2) modifying existing all-purpose dual carriageways; and
3) smart motorways.

The additional relaxations included in this NAA allow greater flexibility when dealing with the constraints associated with enhancing elements of existing motorways and all-purpose dual carriageways.

This NAA is to be used in conjunction with CD 109 [Ref 1.N], GD 300 [Ref 3.N] and IAN 161 [Ref 4.N] where appropriate.

Assumptions made in the preparation of this document

The assumptions made in GG 101 [Ref 2.N] apply to this document.

Downloaded from https://www.standardsforhighways.co.uk on 07-Aug-2023, CD 109 , published: Mar-2020

Abbreviations

Abbreviations

Abbreviation	Definition
IAN	Interim Advice Note

Downloaded from https://www.standardsforhighways.co.uk on 07-Aug-2023, CD 109 , published: Mar-2020

Terms and definitions

Terms

Term	Definition
Expressway	A high speed dual carriageway that has at least two lanes in each direction, grade separated junctions and uses technology to support operational regimes (see GD 300 [Ref 3.N]).

Downloaded from https://www.standardsforhighways.co.uk on 07-Aug-2023, CD 109 , published: Mar-2020

E/1. Modifying existing motorways

Scope

E/1.1 The requirements and advice in Section E/1 shall only be used when modifying existing motorways, with the exception of smart motorway and expressway schemes.

E/1.1.1 The parameters in Section E/1 should only be used where it is not practicable to comply with the requirements of CD 109 [Ref 1.N].

NOTE 1 IAN 161 [Ref 4.N] provides requirements and advice for the design of smart motorways.

NOTE 2 Document GD 300 [Ref 3.N] provides requirements and advice for the design of expressways.

E/1.2 The parameters in Section E/1 shall not be used for new motorway elements e.g. the construction of a new slip road.

Geometric parameters

Design speed (CD 109 clauses 2.1 and 2.4)

E/1.3 Design speed shall be derived in accordance with CD 109 [Ref 1.N] however all design speeds can be classified as band B.

Combinations (CD 109 clause 2.12)

E/1.4 The relaxations below desirable minimum identified in CD 109 [Ref 1.N] for the following parameters shall be permitted in combination:

1) stopping sight distance;
2) horizontal curvature;
3) vertical crest curves;
4) absolute minimum for sag curves;
5) superelevation.

Immediate approaches to junctions (CD 109 clause 2.14)

E/1.5 The relaxations below desirable minimum identified in CD 109 [Ref 1.N] for the following parameters shall be permitted on the immediate approaches to junctions:

1) stopping sight distance;
2) vertical crest curves;
3) absolute minimum for sag curves.

Stopping sight distance (CD 109 clause 3.7)

E/1.6 The relaxations of one design speed step described in CD 109 [Ref 1.N] Section 3 for band A roads shall be permitted for band B roads.

Road camber and drainage (CD 109 clauses 4.1 to 4.4)

E/1.7 Crossfall shall be measured across the paved surface of a road's cross-section.

NOTE The paved surface of the cross-section comprises the carriageway, hard shoulder and hard strips.

E/1.8 Where the total width of the running lanes is to be increased, the existing drainage flow paths shall be assessed to determine their suitability.

E/1.8.1 Where the assessment of suitability identifies a benefit of doing so, crossfall may be increased by 0.5% above the requirements of CD 109 [Ref 1.N] Table 2.9 to mitigate excessive depths of water.

Downloaded from https://www.standardsforhighways.co.uk on 07-Aug-2023, CD 109 , published: Mar-2020

E/1.9 Retention of the existing crossfall (running lanes, hard shoulder, and hard strip) shall be permitted unless:

1) the assessment of drainage flow paths indicates the existing crossfall is not suitable (if an assessment is required);
2) the variation in crossfall for any given cross-section does not meet the criteria given in the following clauses in this sub-section of this document;
3) the review of the existing operational performance as described in this document highlights a collision problem relating to the existing crossfall, e.g. standing water.

E/1.10 The change in gradient of crossfall shall not exceed 5%.

NOTE For example, a hard shoulder with a 2.5% fall towards the verge adjacent to lane one with a 2.5% fall towards the central reserve, is acceptable as the overall change is 5%.

E/1.11 Changes in crossfall that create a sag shall only occur within hatched road markings with solid edge lines.

E/1.12 Where a sag creates a low point the associated surface water flow width shall not enter a traffic lane.

E/1.13 Crossfall shall not change within a lane.

E/1.14 Adverse camber shall not be provided on horizontal radii less than 2000 metres.

Transitions (CD 109 clause 4.14)

E/1.15 The basic transition length shall be no shorter than the existing transition.

Downloaded from https://www.standardsforhighways.co.uk on 07-Aug-2023, CD 109 , published: Mar-2020

E/2. Modifying existing all-purpose dual carriageways

Scope

E/2.1 The requirements and advice in Section E/2 shall only be used when modifying existing all-purpose dual carriageways, with the exception of expressways.

E/2.1.1 The parameters in Section E/2 should only be used where it is not practicable to comply with the requirements of CD 109 [Ref 1.N].

NOTE Document GD 300 [Ref 3.N] provides requirements and advice for the design of expressways.

E/2.2 The parameters in Section E/2 shall not be used for new all-purpose dual carriageway elements e.g. the construction of a new slip road.

Geometric parameters

Combinations (CD 109 clause 2.12)

E/2.3 The relaxations below desirable minimum identified in CD 109 [Ref 1.N] for the following parameters shall be permitted in combination:

1) stopping sight distance;
2) horizontal curvature;
3) vertical crest curves;
4) absolute minimum for sag curves.

Downloaded from https://www.standardsforhighways.co.uk on 07-Aug-2023, CD 109 , published: Mar-2020

E/3. Smart motorways

Scope

E/3.1 The requirements and advice contained in Section E/3 shall only be used to upgrade an existing motorway to a smart motorway.

E/3.2 Where a new junction is proposed as part of a smart motorway, the parameters given in Section E/3 shall not be used to design the new elements of that junction e.g. the slip roads.

Geometric parameters

Design speed (CD 109 clauses 2.1 and 2.4)

E/3.3 Design speed shall be derived in accordance with CD 109 [Ref 1.N], however all design speeds can be classified as band B.

Combinations (CD 109 clauses 2.12 and 2.13)

E/3.4 The relaxations below desirable minimum for the following parameters shall be permitted in combination:

1) stopping sight distance;
2) horizontal curvature;
3) vertical crest curves;
4) absolute minimum for sag curves;
5) superelevation.

Immediate approaches to junctions (CD 109 clause 2.14)

E/3.5 The relaxations below desirable minimum identified in CD 109 [Ref 1.N] for the following parameters shall be permitted on the immediate approaches to junctions:

1) stopping sight distance;
2) vertical crest curves;
3) absolute minimum for sag curves.

Stopping sight distance (CD 109 clauses 3.7)

E/3.6 The relaxations of one design speed step described in CD 109 [Ref 1.N] Section 3 for band A roads shall be permitted for band B roads.

Road camber and drainage (CD 109 clauses 4.1 to 4.4)

E/3.7 Crossfall shall be measured across the paved surface of a road's cross-section.

NOTE The paved surface of the cross-section comprises the carriageway, hard shoulder and hard strips.

E/3.8 Where the total width of the running lanes is to be increased, the existing drainage flow paths shall be assessed to determine their suitability.

NOTE Where the assessment of suitability identifies a benefit of doing so, crossfall can be increased by 0.5% above the requirements of CD 109 [Ref 1.N] to mitigate excessive depths of water.

E/3.9 Retention of the existing crossfall (running lanes, hard shoulder, and hard strip) shall be permitted unless:

1) the assessment of drainage flow paths indicates the existing crossfall is not suitable (if an assessment is required);

Downloaded from https://www.standardsforhighways.co.uk on 07-Aug-2023, CD 109 , published: Mar-2020

2) the variation in crossfall for any given cross-section does not meet the criteria given in the following clauses in this sub-section of this document;
3) the review of the existing operational performance as described in this document highlights a collision problem relating to the existing crossfall, e.g. standing water.

E/3.10 The change in gradient of crossfall shall not exceed 5%.

NOTE For example, a hard shoulder with a 2.5% fall towards the verge adjacent to lane one with a 2.5% fall towards the central reserve, is acceptable as the overall change is 5%.

E/3.11 Changes in crossfall that create a sag shall only occur within hatched road markings with solid edge lines.

E/3.12 Where a sag creates a low point the associated surface water flow width shall not enter a traffic lane.

E/3.13 Crossfall shall not change within a lane.

E/3.14 Adverse camber shall not be provided on horizontal radii less than 2000 metres.

E/3.15 A minimum distance of 3 metres in cross-section shall be provided between changes in crossfall or superelevation within any given cross-section, except for connector road nosings where two changes in crossfall or superelevation are located on either side of the nose.

E/3.15.1 Where pavement works are being carried out (such as resurfacing or strengthening) then the crown line should be relocated to co-locate it with the road marking position, or adverse camber removed.

NOTE Where an adverse camber is to be retained between the new lane 1 and 2, there is no requirement to move the crown line from its existing position to co-locate it with the road marking position.

Downloaded from https://www.standardsforhighways.co.uk on 07-Aug-2023, CD 109 , published: Mar-2020

E/4. Normative references

The following documents, in whole or in part, are normative references for this document and are indispensable for its application. For dated references, only the edition cited applies. For undated references, the latest edition of the referenced document (including any amendments) applies.

Ref 1.N	Highways England. CD 109, 'Highway link design'
Ref 2.N	Highways England. GG 101, 'Introduction to the Design Manual for Roads and Bridges'
Ref 3.N	Highways England. GD 300, 'Requirements for new and upgraded all-purpose trunk roads (expressways)'
Ref 4.N	IAN 161, 'Smart Motorways'

Downloaded from https://www.standardsforhighways.co.uk on 07-Aug-2023, CD 109 , published: Mar-2020

Downloaded from https://www.standardsforhighways.co.uk on 07-Aug-2023, CD 109 , published: Mar-2020

© Crown copyright 2020.
You may re-use this information (not including logos) free of charge in any format or medium, under the terms of the Open Government Licence. To view this licence:
visit **www.nationalarchives.gov.uk/doc/open-government-licence/**,
write to the **Information Policy Team, The National Archives, Kew, London TW9 4DU**,
or email **psi@nationalarchives.gsi.gov.uk**.

Road Layout
Design

CD 109
Northern Ireland National Application Annex to CD 109 Highway link design

(formerly TD 9/93)

Revision 0

Summary
This National Application Annex sets out the Department for Infrastructure, Northern Ireland specific requirements for highway link design.

Feedback and Enquiries
Users of this document are encouraged to raise any enquiries and/or provide feedback on the content and usage of this document to the dedicated team in the Department for Infrastructure, Northern Ireland. The email address for all enquiries and feedback is: dcu@infrastructure-ni.gov.uk

This is a controlled document.

Downloaded from https://www.standardsforhighways.co.uk on 07-Aug-2023, CD 109 , published: Mar-2020

Contents

Release notes **2**

Foreword **3**
Publishing information . . . 3
Contractual and legal considerations . . . 3

Introduction **4**
Background . . . 4
Assumptions made in the preparation of this document . . . 4

NI/1. Traffic signs and road markings (additional to CD 109) **5**

NI/2. Normative references **6**

Downloaded from https://www.standardsforhighways.co.uk on 07-Aug-2023, CD 109 , published: Mar-2020

Release notes

Version	Date	Details of amendments
0	Nov 2019	Department for Infrastructure, Northern Ireland National Application Annex to CD 109.

Downloaded from https://www.standardsforhighways.co.uk on 07-Aug-2023, CD 109 , published: Mar-2020

Foreword

Publishing information

This document is published by Highways England on behalf of Department for Infrastructure, Northern Ireland.

This document supersedes those parts of TD 9/93 'Highway link design' which solely relate to roads in Northern Ireland which are withdrawn

Contractual and legal considerations

This document forms part of the works specification. It does not purport to include all the necessary provisions of a contract. Users are responsible for applying all appropriate documents applicable to their contract.

Downloaded from https://www.standardsforhighways.co.uk on 07-Aug-2023, CD 109 , published: Mar-2020

Introduction

Background

This National Application Annex gives the Department for Infrastructure, Northern Ireland-specific requirements for the design of highway links to CD 109 on the Northern Ireland road network.

This National Application Annex is to be used in conjunction with CD 109.

Assumptions made in the preparation of this document

The assumptions made in GG 101 [Ref 1.N] apply to this document.

Downloaded from https://www.standardsforhighways.co.uk on 07-Aug-2023, CD 109 , published: Mar-2020

NI/1. Traffic signs and road markings (additional to CD 109)

NI/1.1 All traffic signs and road markings on highway links shall conform to the TSR(NI) 1997 1997 [Ref 2.N].

NOTE *Traffic sign and road marking diagram numbers in TSR(NI) 1997 1997 [Ref 2.N] are generally consistent with TSRGD 2016 2016 [Ref 3.N] but the two sets of regulations can occasionally differ.*

Downloaded from https://www.standardsforhighways.co.uk on 07-Aug-2023, CD 109 , published: Mar-2020

NI/2. Normative references

The following documents, in whole or in part, are normative references for this document and are indispensable for its application. For dated references, only the edition cited applies. For undated references, the latest edition of the referenced document (including any amendments) applies.

Ref 1.N	Highways England. GG 101, 'Introduction to the Design Manual for Roads and Bridges'
Ref 2.N	The Stationery Office (TSO). Department for Infrastructure (DfI). TSR(NI) 1997, 'The Traffic Signs Regulations (Northern Ireland) 1997' , 1997
Ref 3.N	The Stationery Office. TSRGD 2016, 'The Traffic Signs Regulations and General Directions 2016' , 2016

Downloaded from https://www.standardsforhighways.co.uk on 07-Aug-2023, CD 109 , published: Mar-2020

Downloaded from https://www.standardsforhighways.co.uk on 07-Aug-2023, CD 109 , published: Mar-2020

© Crown copyright 2020.
You may re-use this information (not including logos) free of charge in any format or medium, under the terms of the Open Government Licence. To view this licence:
visit **www.nationalarchives.gov.uk/doc/open-government-licence/**,
write to the **Information Policy Team, The National Archives, Kew, London TW9 4DU**,
or email **psi@nationalarchives.gsi.gov.uk**.

Road Layout
Design

CD 109
Scotland National Application Annex to CD 109 Highway link design

(formerly TD 9/93)

Revision 0

Summary
There are no specific requirements for Transport Scotland supplementary or alternative to those given in CD 109.

Feedback and Enquiries
Users of this document are encouraged to raise any enquiries and/or provide feedback on the content and usage of this document to the dedicated Transport Scotland team. The email address for all enquiries and feedback is: TSStandardsBranch@transport.gov.scot

This is a controlled document.

Downloaded from https://www.standardsforhighways.co.uk on 07-Aug-2023, CD 109 , published: Mar-2020

Contents

Release notes **2**

Downloaded from https://www.standardsforhighways.co.uk on 07-Aug-2023, CD 109 , published: Mar-2020

Release notes

Version	Date	Details of amendments
0	Nov 2019	Transport Scotland National Application Annex to CD 109.

Downloaded from https://www.standardsforhighways.co.uk on 07-Aug-2023, CD 109 , published: Mar-2020

Downloaded from https://www.standardsforhighways.co.uk on 07-Aug-2023, CD 109 , published: Mar-2020

© Crown copyright 2020.
You may re-use this information (not including logos) free of charge in any format or medium, under the terms of the Open Government Licence. To view this licence:
visit **www.nationalarchives.gov.uk/doc/open-government-licence/**,
write to the **Information Policy Team, The National Archives, Kew, London TW9 4DU**,
or email **psi@nationalarchives.gsi.gov.uk**.

Llywodraeth Cymru
Welsh Government

Road Layout
Design

CD 109
Wales National Application Annex to CD 109
Highway link design

(formerly TD 9/93)

Revision 0

Summary
There are no specific requirements for Welsh Government supplementary or alternative to those given in CD 109.

Feedback and Enquiries
Users of this document are encouraged to raise any enquiries and/or provide feedback on the content and usage of this document to the dedicated Welsh Government team. The email address for all enquiries and feedback is: Standards_Feedback_and_Enquiries@gov.wales

This is a controlled document.

Downloaded from https://www.standardsforhighways.co.uk on 07-Aug-2023, CD 109 , published: Mar-2020

Contents

Release notes **2**

Downloaded from https://www.standardsforhighways.co.uk on 07-Aug-2023, CD 109 , published: Mar-2020

Release notes

Version	Date	Details of amendments
0	Nov 2019	Welsh Government National Application Annex to CD 109.

Downloaded from https://www.standardsforhighways.co.uk on 07-Aug-2023, CD 109 , published: Mar-2020

Downloaded from https://www.standardsforhighways.co.uk on 07-Aug-2023, CD 109 , published: Mar-2020

© Crown copyright 2020.
You may re-use this information (not including logos) free of charge in any format or medium, under the terms of the Open Government Licence. To view this licence:
visit **www.nationalarchives.gov.uk/doc/open-government-licence/**,
write to the **Information Policy Team, The National Archives, Kew, London TW9 4DU**,
or email **psi@nationalarchives.gsi.gov.uk**.